Information effective as of 10/23/04

Concave Fabric Wall

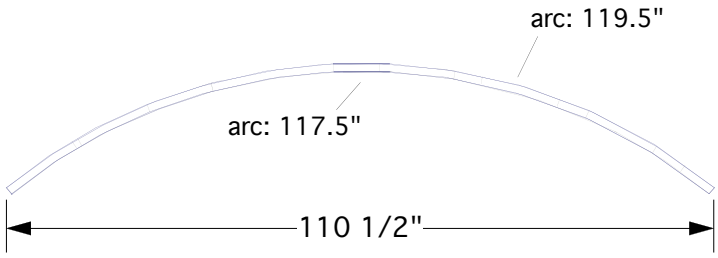

TOP VIEW

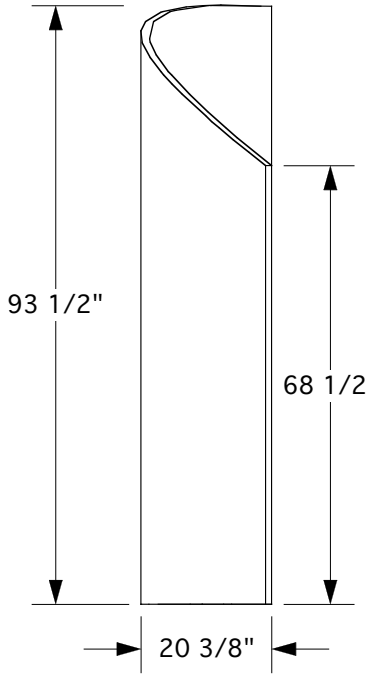

LEFT VIEW

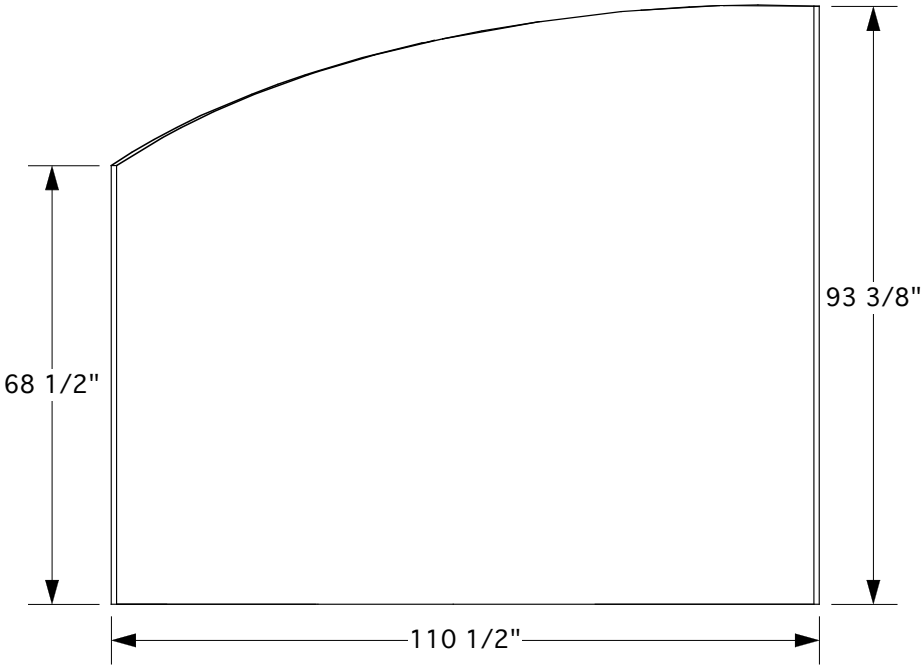

FRONT VIEW

©2004 • ABEX DISPLAY SYSTEMS • ALL RIGHTS RESERVED

Information effective as of 10/23/04

Concave Fabric Wall

EXPLODED VIEW

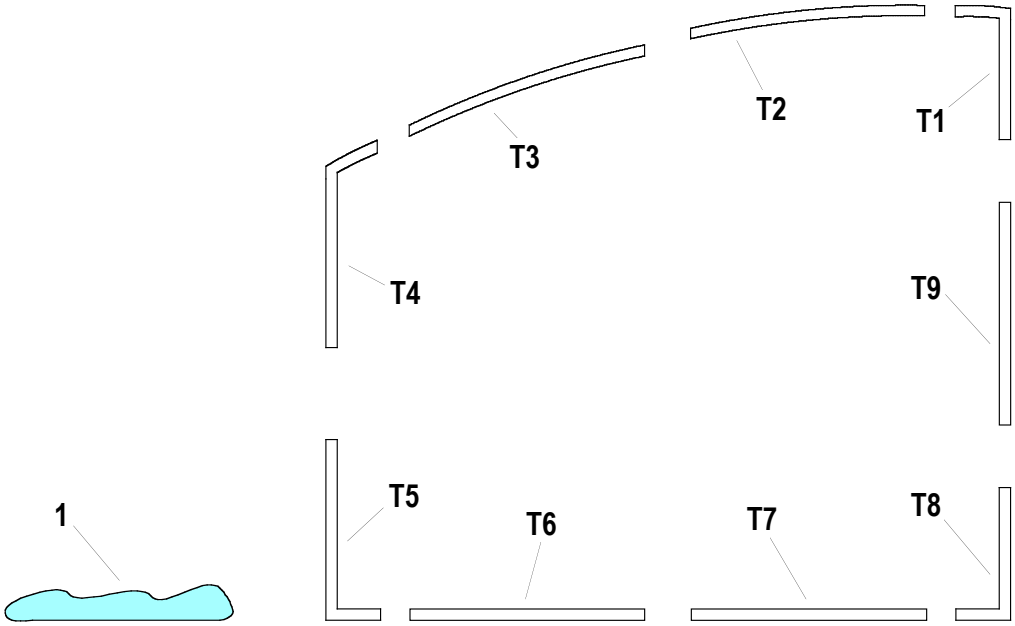

ID	QTY	PART	DESCRIPTION	WGT
1	1	F36-W001-FAB	Zippered Fabric	9.0 lbs
T1	1	F36-W001-T1	2" Alum Tube - Upper Left Corner	4.0 lbs
T2	1	F36-W001-T2	2" Alum Tube - Upper Curve Left	4.0 lbs
T3	1	F36-W001-T3	2" Alum Tube - Upper Curve Right	4.0 lbs
T4	1	F36-W001-T4	2" Alum Tube - Upper Right Corner	4.0 lbs
T5	1	F36-W001-T5	2" Alum Tube - Lower Right Corner	4.0 lbs
T6	1	F36-W001-T6	2" Alum Tube - Lower Straight Right	4.0 lbs
T7	1	F36-W001-T7	2" Alum Tube - Lower Straight Left	4.0 lbs
T8	1	F36-W001-T8	2" Alum Tube - Lower Left Corner	4.0 lbs
T9	1	F36-W001-T9	2" Alum Tube - Left Straight Section	4.0 lbs
			TOTAL WEIGHT:	**45 lbs**

©2004 • ABEX DISPLAY SYSTEMS • ALL RIGHTS RESERVED

FUSION THREESIX GRAPHIC SPECS

F36-W001

Information effective as of 10/23/04

Concave Fabric Wall

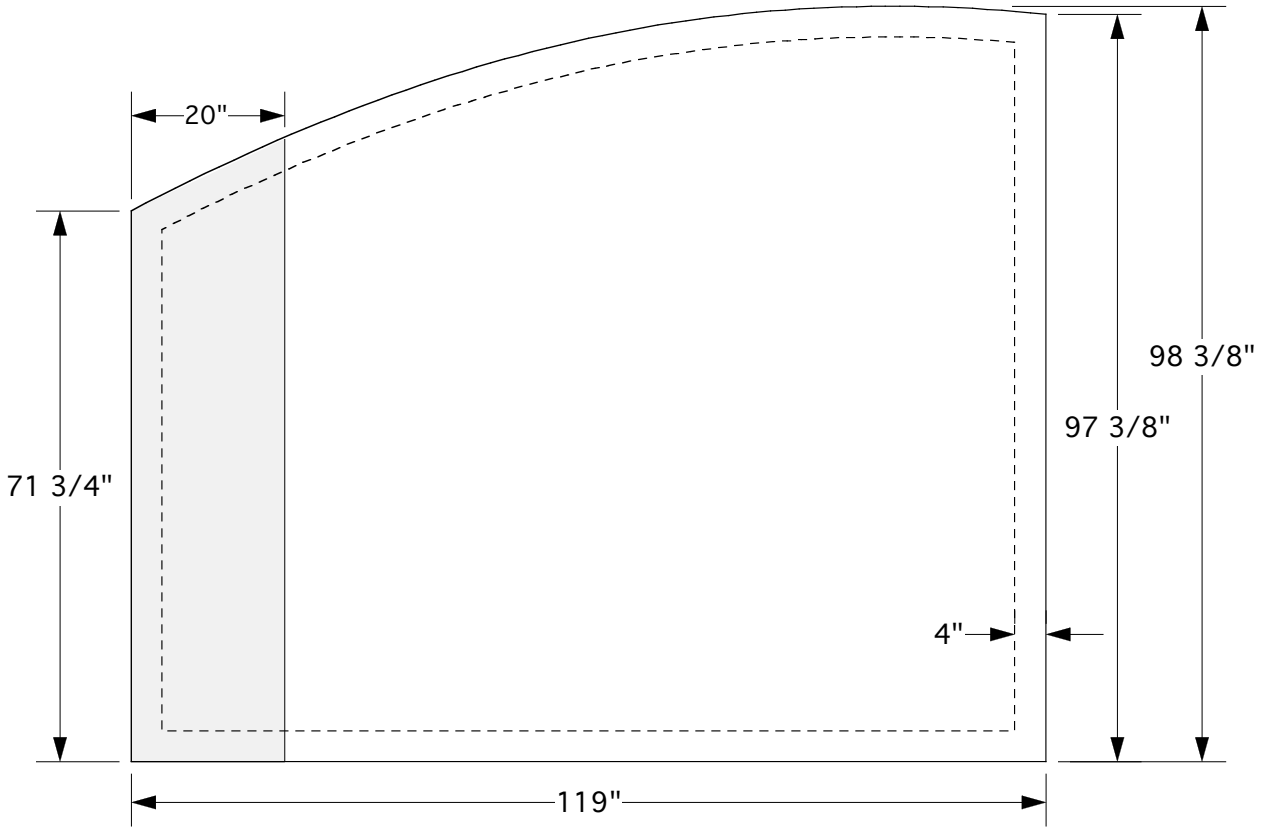

outside line: actual art
inside line: safe art
potentially hidden by tower*

FRONT VIEW

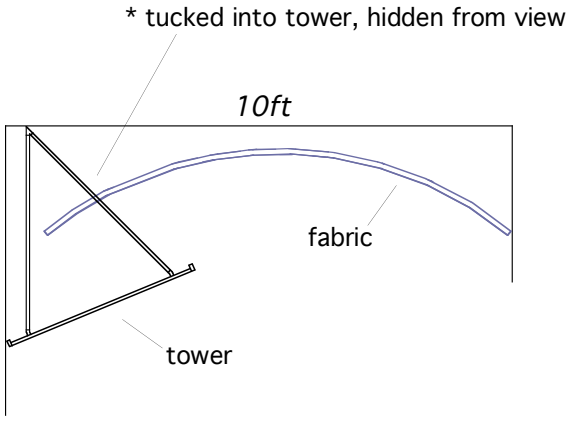

TOP VIEW

©2004 • ABEX DISPLAY SYSTEMS • ALL RIGHTS RESERVED