Information effective as of 10/25/04

Left Fabric Wing

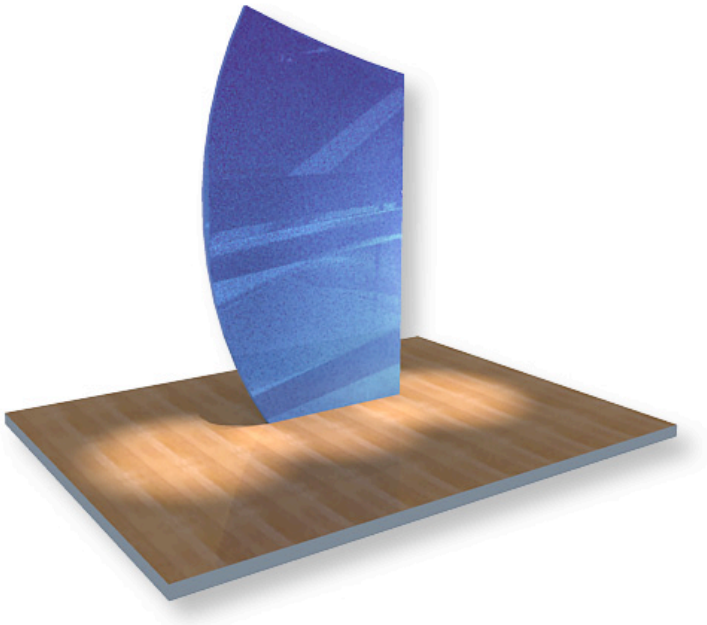

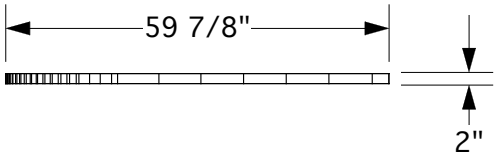

TOP VIEW

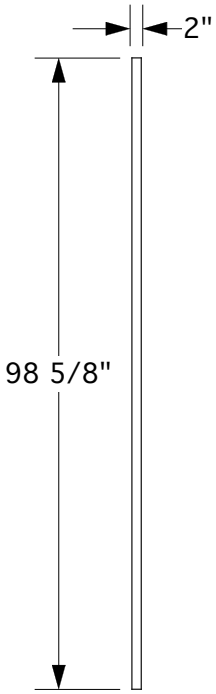

LEFT VIEW

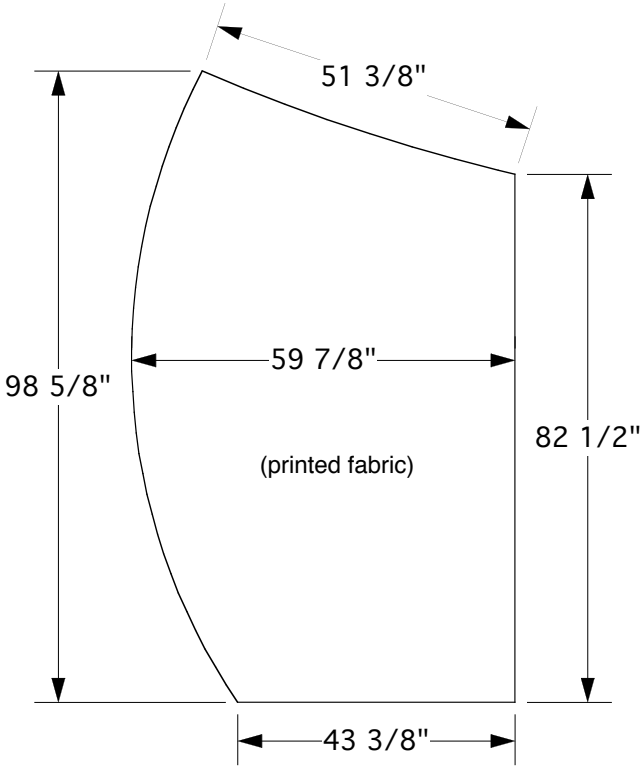

FRONT VIEW

©2004 • ABEX DISPLAY SYSTEMS • ALL RIGHTS RESERVED

F11-W002

Information effective as of 10/25/04

Left Fabric Wing

EXPLODED VIEW

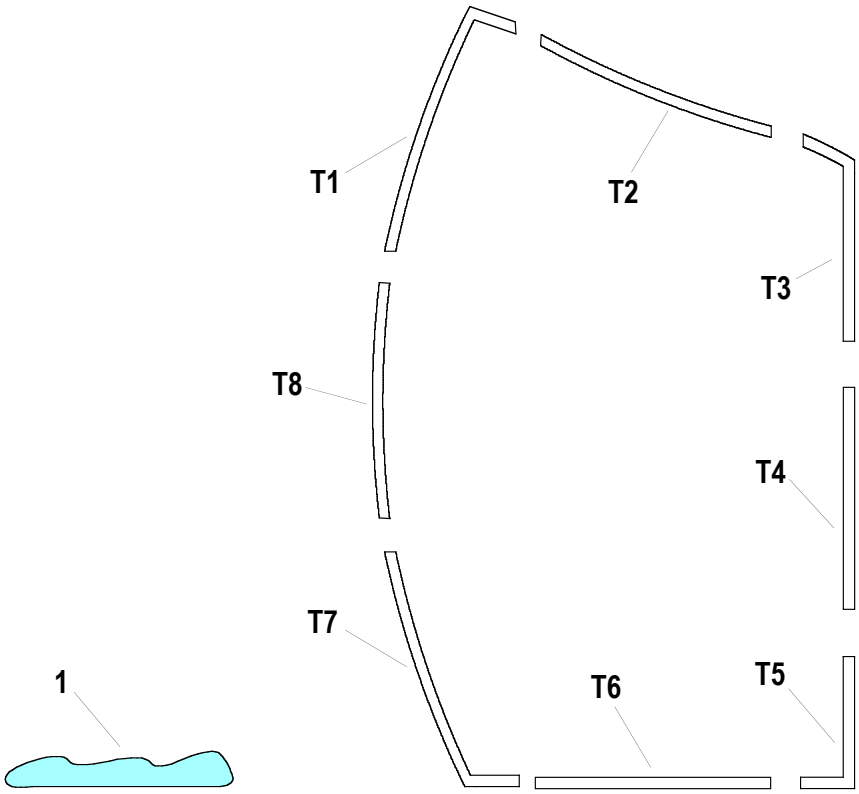

ID	QTY	PART	DESCRIPTION	WGT
1	1	F11-W002-FAB	Zippered Fabric	9.0 lbs
T1	1	F11-W002-T1	2" Alum Tube - Upper Curve Left	4.0 lbs
T2	1	F11-W002-T2	2" Alum Tube - Upper Curve	4.0 lbs
T3	1	F11-W002-T3	2" Alum Tube - Upper Right Corner	4.0 lbs
T4	1	F11-W002-T4	2" Alum Tube - Right Straight Section	4.0 lbs
T5	1	F11-W002-T5	2" Alum Tube - Lower Right Corner	4.0 lbs
T6	1	F11-W002-T6	2" Alum Tube - Lower Straight	4.0 lbs
T7	1	F11-W002-T7	2" Alum Tube - Lower Curve Left	4.0 lbs
T8	1	F11-W002-T8	2" Alum Tube - Center Curve Left	4.0 lbs
			TOTAL WEIGHT:	41 lbs

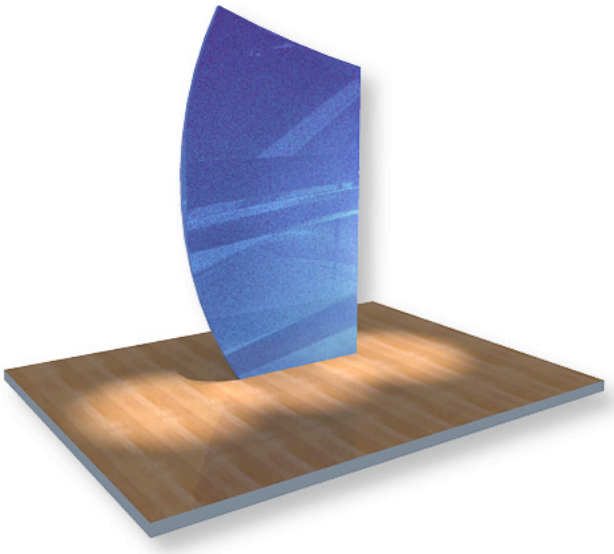

©2004 • ABEX DISPLAY SYSTEMS • ALL RIGHTS RESERVED

Information effective as of 10/25/04

Left Fabric Wing

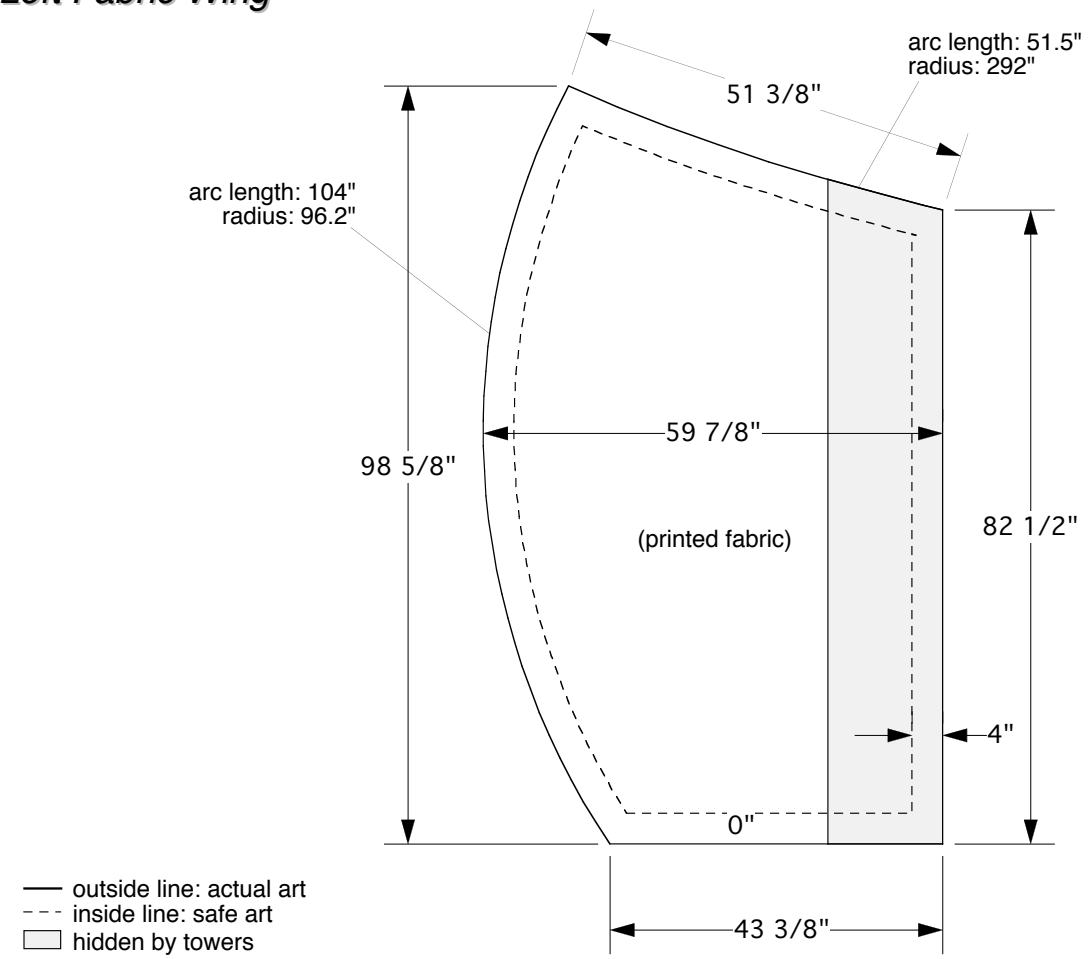

FRONT VIEW

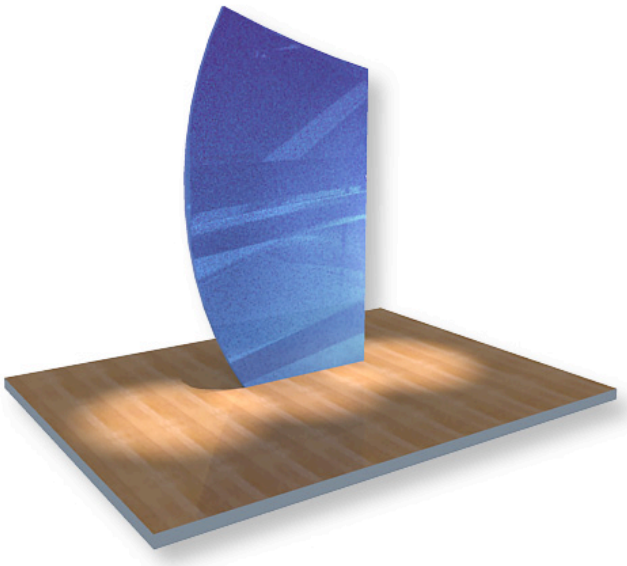

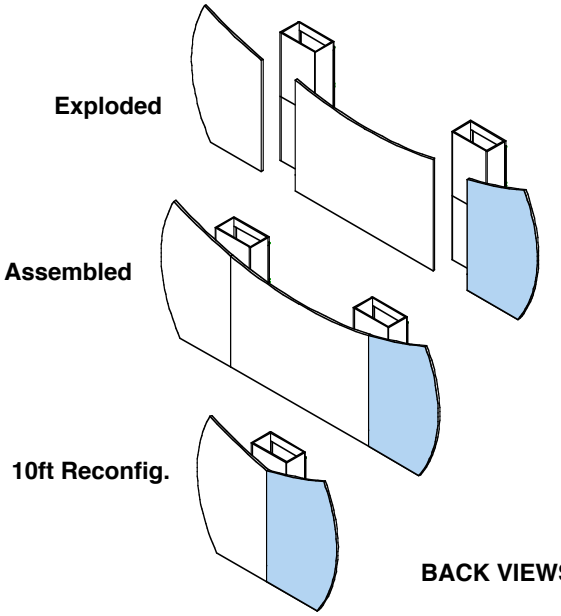

BACK VIEWS

©2004 • ABEX DISPLAY SYSTEMS • ALL RIGHTS RESERVED