QUICK START INSTRUCTIONS
PANEL SYSTEMS

BACKWALL

1

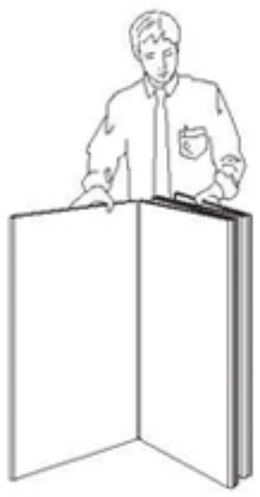

Position bottom panels (holes up). Adjust panels so edges are even. Partially open one panel for stability.

2

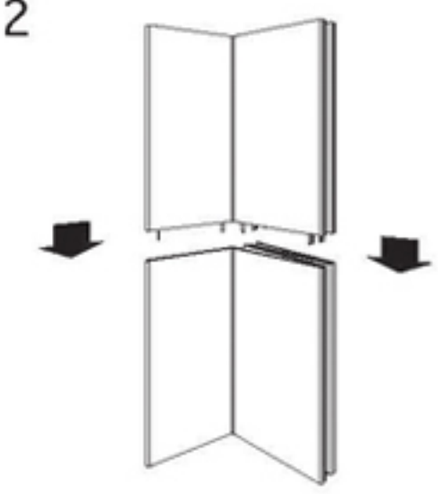

Lift the upper panels onto the bottom panels. Insert pegs into the holes in the bottom panels.

3

Open backwall to desired configuration. "Walk" the panels to desired position: lift the bottom outer panel slightly and push on bottom panel only.

4

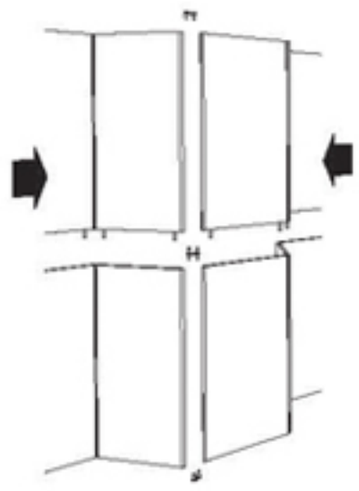

For units consisting of more than one backwall section, connect together using supplied U-clips at top & bottom, and H-clip in the middle.

CURVED ENDS

1

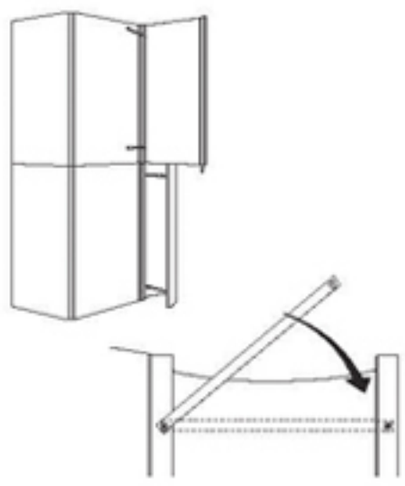

For units with curved ends: after setting up backwall, bend the lower curved panel. Rotate the upper support bar to lock onto screw peg. Repeat for lower support bar.

2

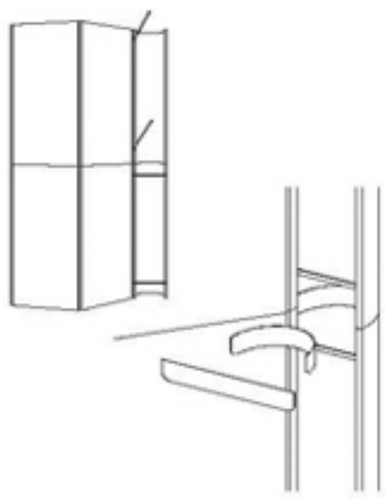

Repeat support bar steps for the suppor bars on the upper curve panel. Flex the tongue with velcro into place behind the seam between curved panels.

HEADER

1

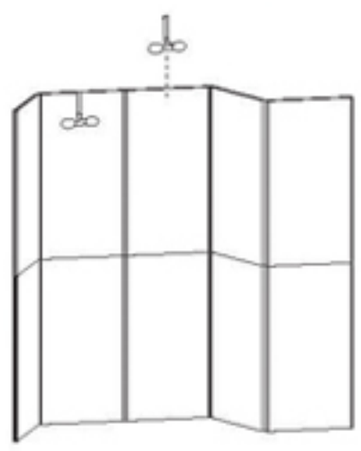

Hook light fixtures over top of backwall and adjust to the center of each panel.

2

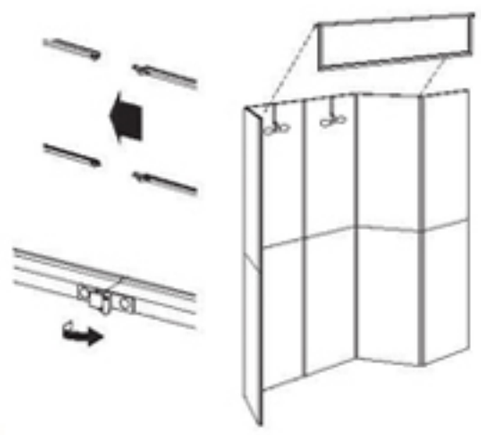

Slide header sections together. Fasten latches. Hang header from backwall.

ALCOVE

1

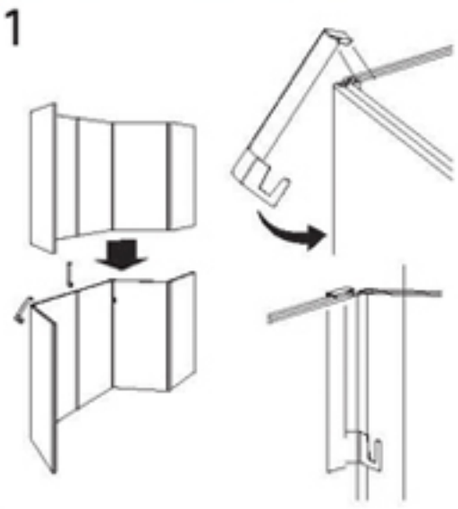

Insert the left, right, and middle shelf support brackets between panels. Set upper panels down onto lower panels.

2

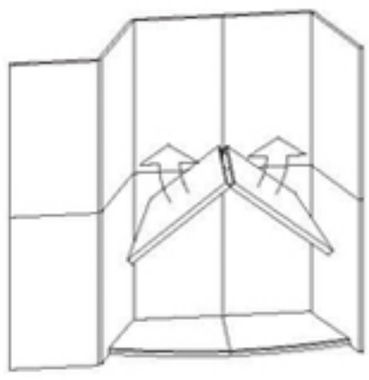

Unfold and latch alcove shelf. Set shelf on floor and use as a template for laying outpanels. When panels are flush with edges of shelf, remove the shelf.

3

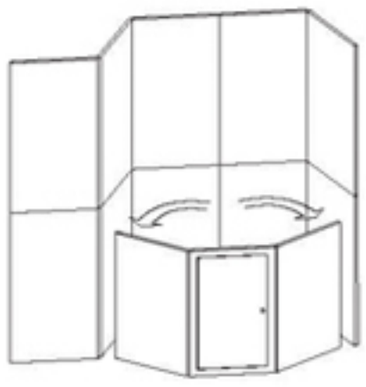

Unfold 3-panel base with door opening outward. The left and right panels attach to the backwall with velcro tabs.

4

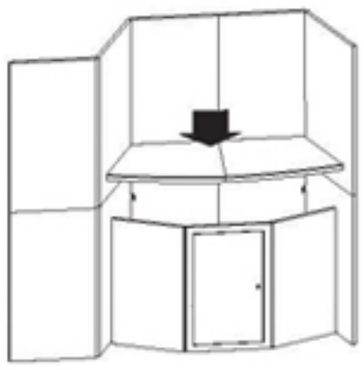

Set down the counter into place, seating the back lip onto the brackets, and the front onto the base panels.

PENINSULA

1

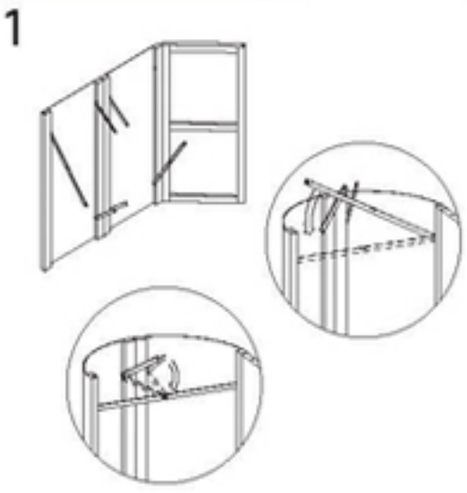

Unfold panels as shown. Flex the curve panels and latch long support rods. The short support rods fold down to fit into the notches in long rods.

2

Fold the panels to close the unit as shown. Insert a U-clip in the top and the bottom to hold panels together.

3

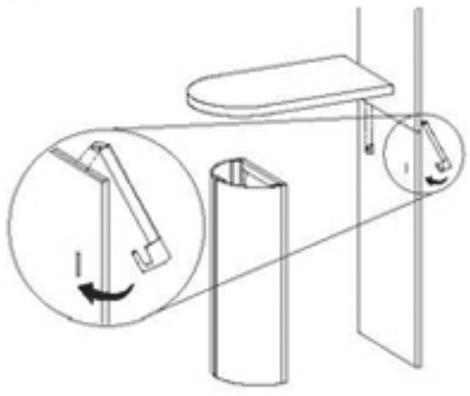

Insert hanging brackets from the rear of the backwall and push through the slots in the panel. Position the base as shown. Rest the counter top between base and set down onto the brackets.

PACKING

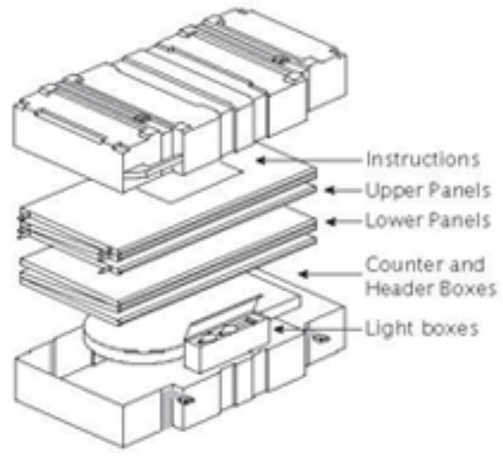

Pack counters & headers in boxes w/foam inserts before placing in cases. Make sure curved panel struts lay flat before folding. Don't place smaller boxes on top of panels as they may leave marks. Cases may be strapped together for easy transportation.

P/N 9904-PLP

Continued on Back

QUICK START INSTRUCTIONS
PANEL SYSTEMS
(Continued)

PLP-1

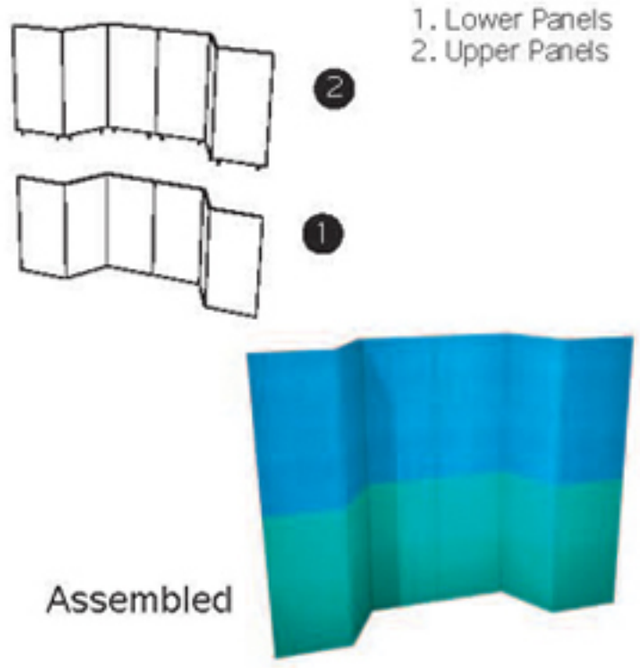

PLP-2

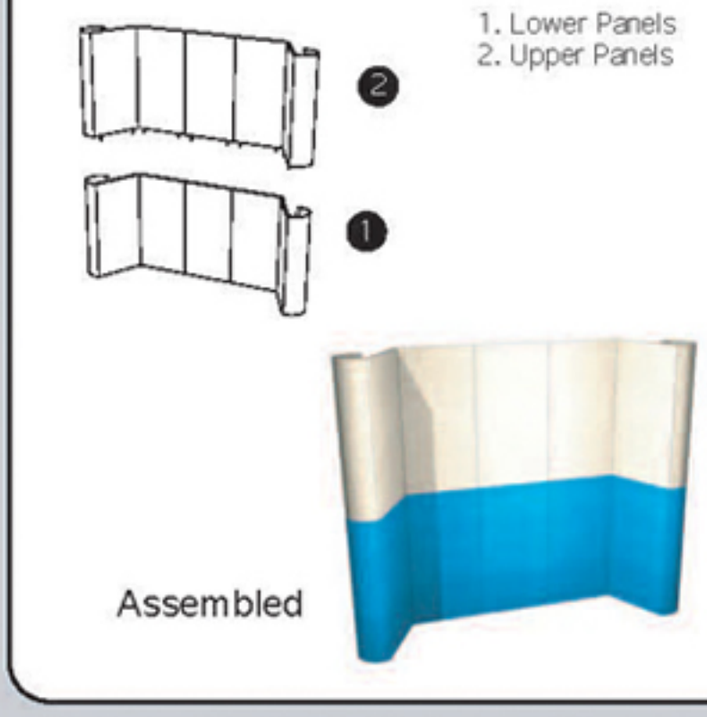

PLP-3

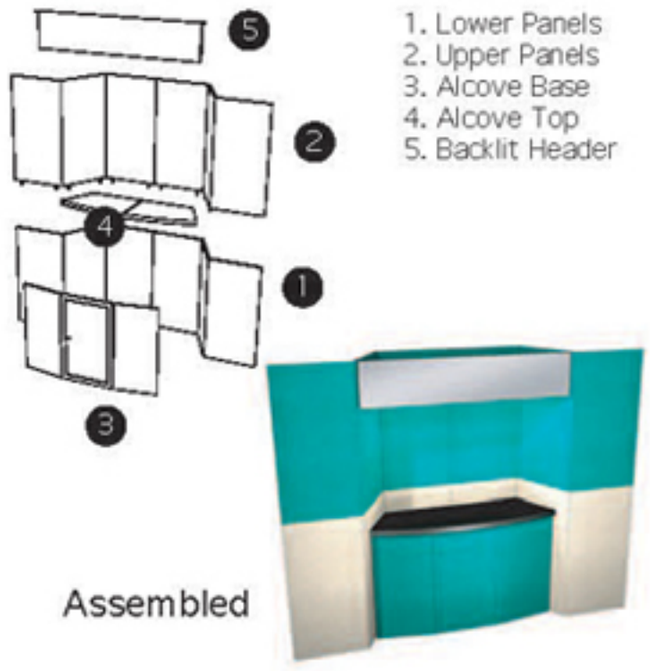

PLP-4

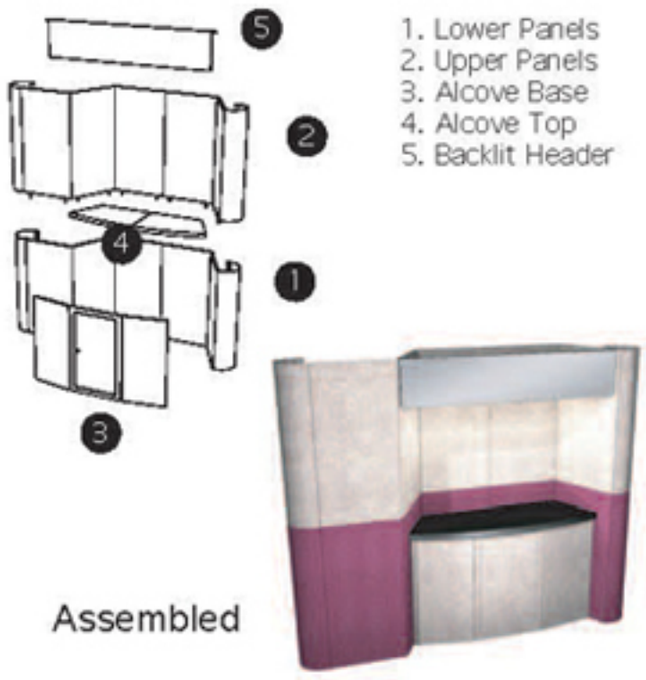

PLP-5

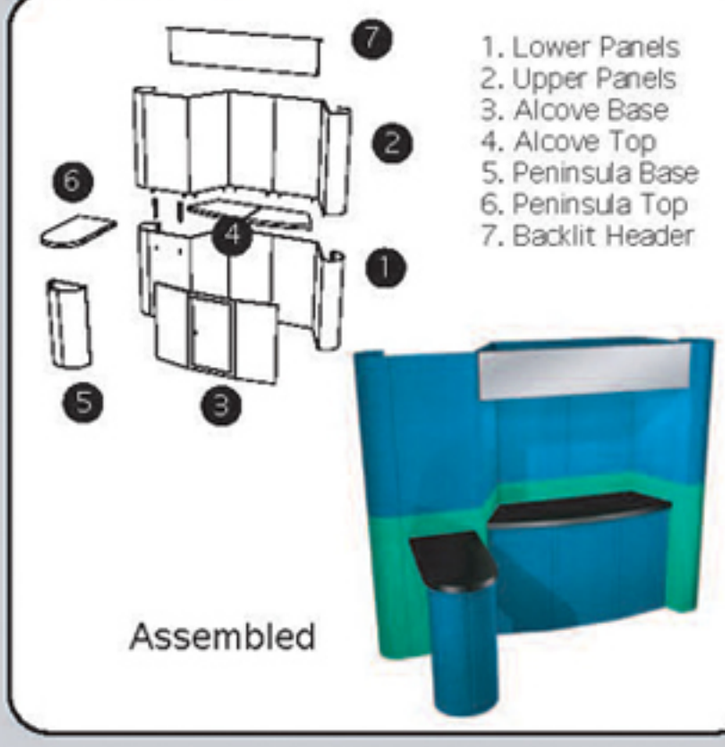

PLP-6

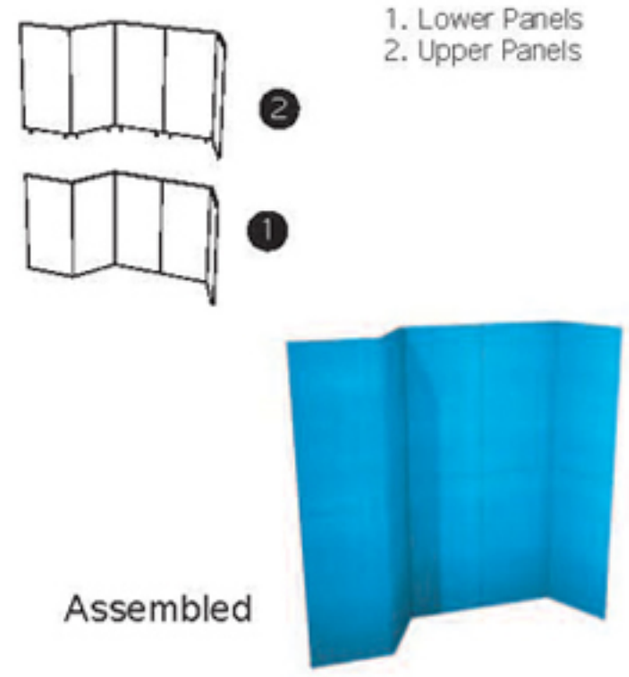

PLP-7

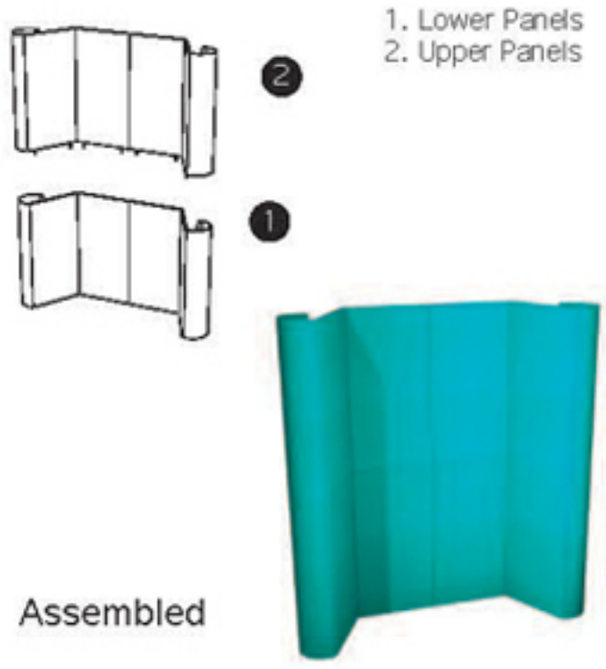

PLP-8

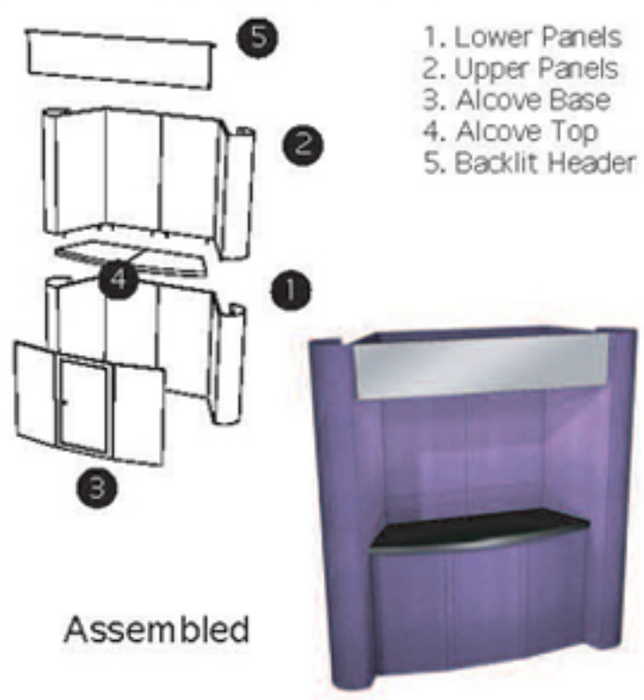

PLP-9

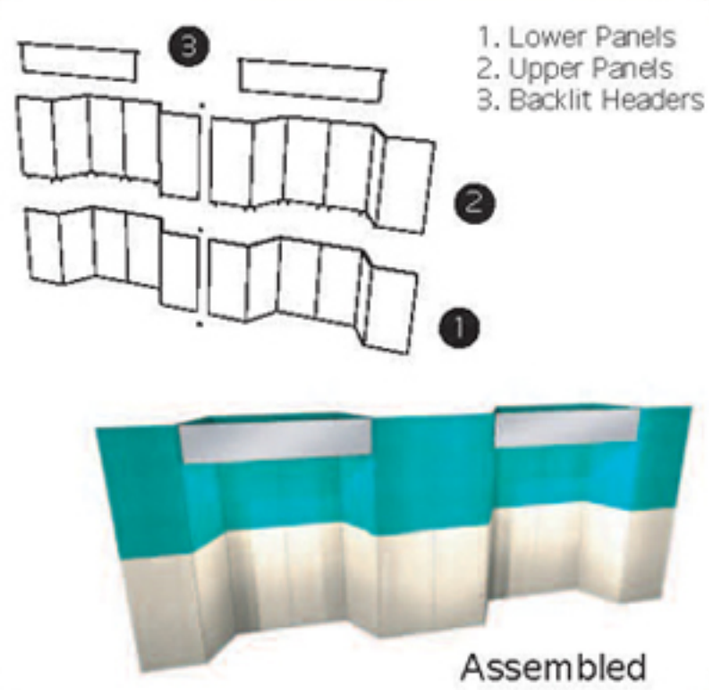

PLP-10

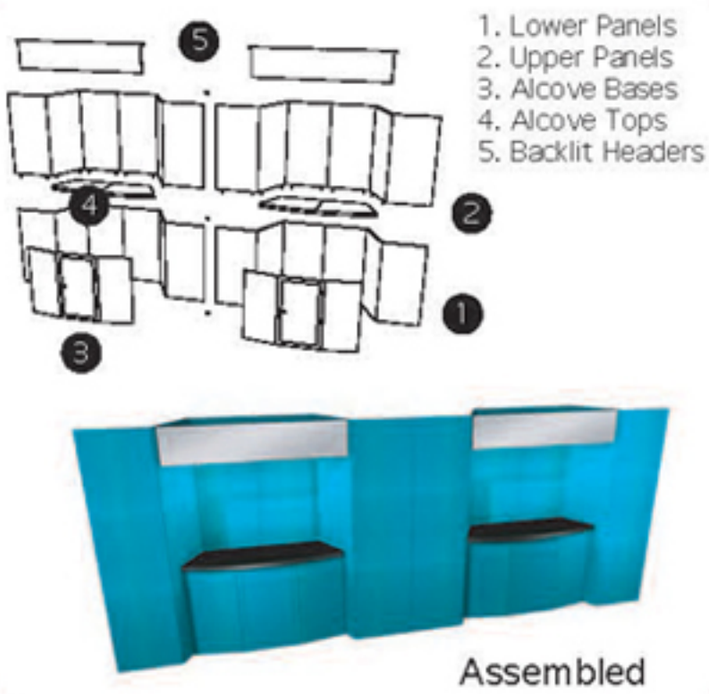

PLP-11

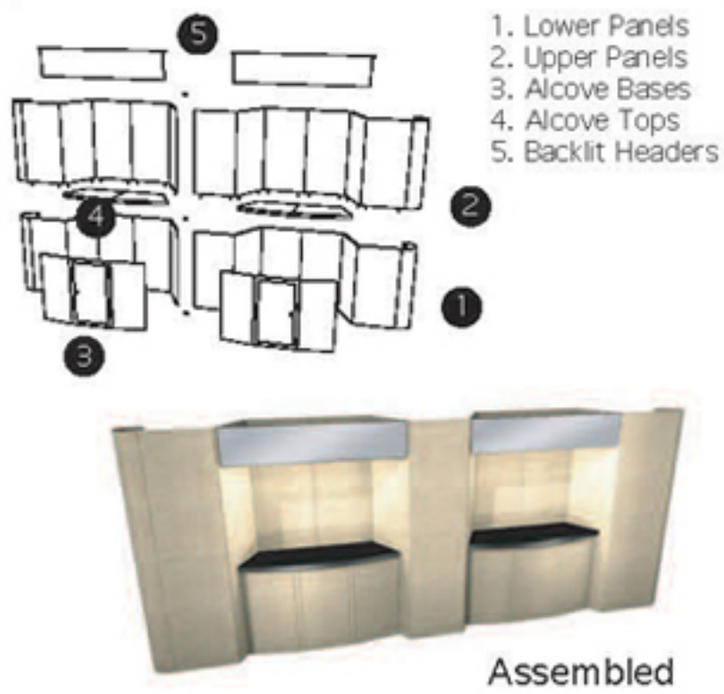

PLP-12

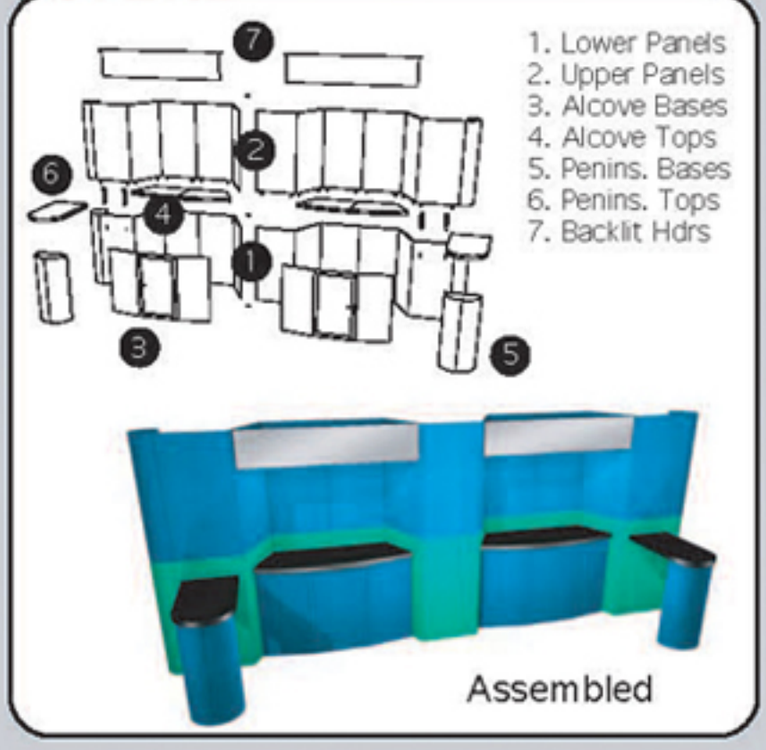

abex 600

MULTICONNECT PANEL SYSTEM

Owner's Manual

INTRODUCTION

Thank you for your recent purchase of an Abex 600 MultiConnect display, manufactured by Abex Display Systems, Inc. An Abex 600 MultiConnect display communicates a message about you: polished, professional, experienced. It not only displays your product and services effectively, it draws your audience in and delivers your message every time. Abex's commitment to excellence will be evident the first time you assemble your unit. This manual was designed to expedite the set-up of your display and to answer some commonly asked questions. Abex knows the importance of customer feedback. We are continually integrating customer suggestions into our products and would greatly appreciate any comments you may have.

Abex Display Systems
Design & Development Team

TABLE OF CONTENTS

	Quick Start: One page instructions for backwall and header assembly for a basic 10' unit.	Page 1
SECTION 1	Component Assembly: Backwall, Curved Panels, ST8, TT6, RT, RDC, RSC, SDC, TDC	Pages 2-11
2	Counter Assembly: A1, K1, C1 ,C2, D30/38, RC, RPC, SPC, TPC	Pages 12-27
3	Table/Pedestal Assembly: RCT, P1, P2, RPC1/2, PR1/2	Pages 28-31
4	Header Assembly: H2/3, HT 1/2, DC2P/3P, DC2/LF, DC3/LF, BH2/3, BH2/3 Angled	Pages 32-37
5	Lightbox and Graphic Sconce Assembly: LBU/LBL, LBF, Double Panel LB, RSC1, RSC2	Pages 38-43
6	Miscellaneous Accessories: Plex Standoffs, MSTD, Tub Conversion, Hanging Abex 350 Truss	Pages 44-48
7	Packing, Care & Maintenance	Pages 49-52

NOTE: Instruction pages which apply to your display are marked with a colored label.

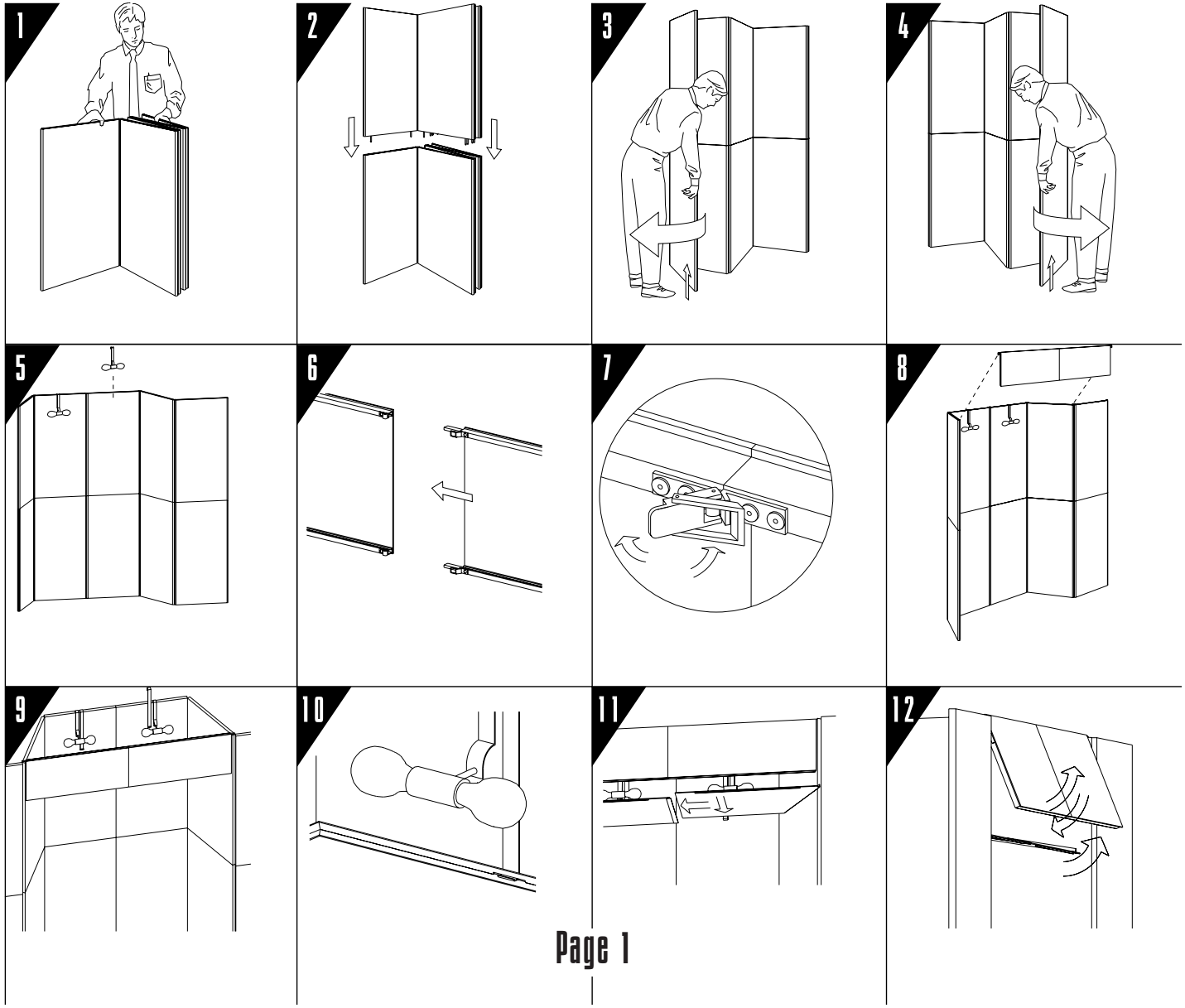

QUICK START

1. Position bottom panels (holes up). Adjust panels so edges are even. Partially open one panel for stability.
2. Lift upper panels onto bottom panels. Insert pegs in holes in bottom panels.
3. Open backwall to desired configuration. Push on bottom of system only. Maintain right angle on one panel to ensure stability.
4. Repeat steps for opposite side. Remember to maintain a right angle on the outer panels while opening system.
5. Hook light fixtures over top of backwall.
6. Slide header sections together.
7. Fasten latches.
8. Hang header from backwall.
9. Attach H2 or H3 header to unit. Hang a pair of diffuser brackets from the top of the backwall adjacent to the light fixtures.
10. Hang the left half of the diffuser from the left diffuser bracket. There is a slot in the diffuser's extrusion to accept the bracket.
11. Hang the right half of the diffuser from the right bracket, and insert edge into the "H" moulding which is glued to the left half.
12. Swing header forward slightly, and raise diffuser. Lower diffuser so plastic strip on bottom of front edge fits inside the channel on the bottom of the header.

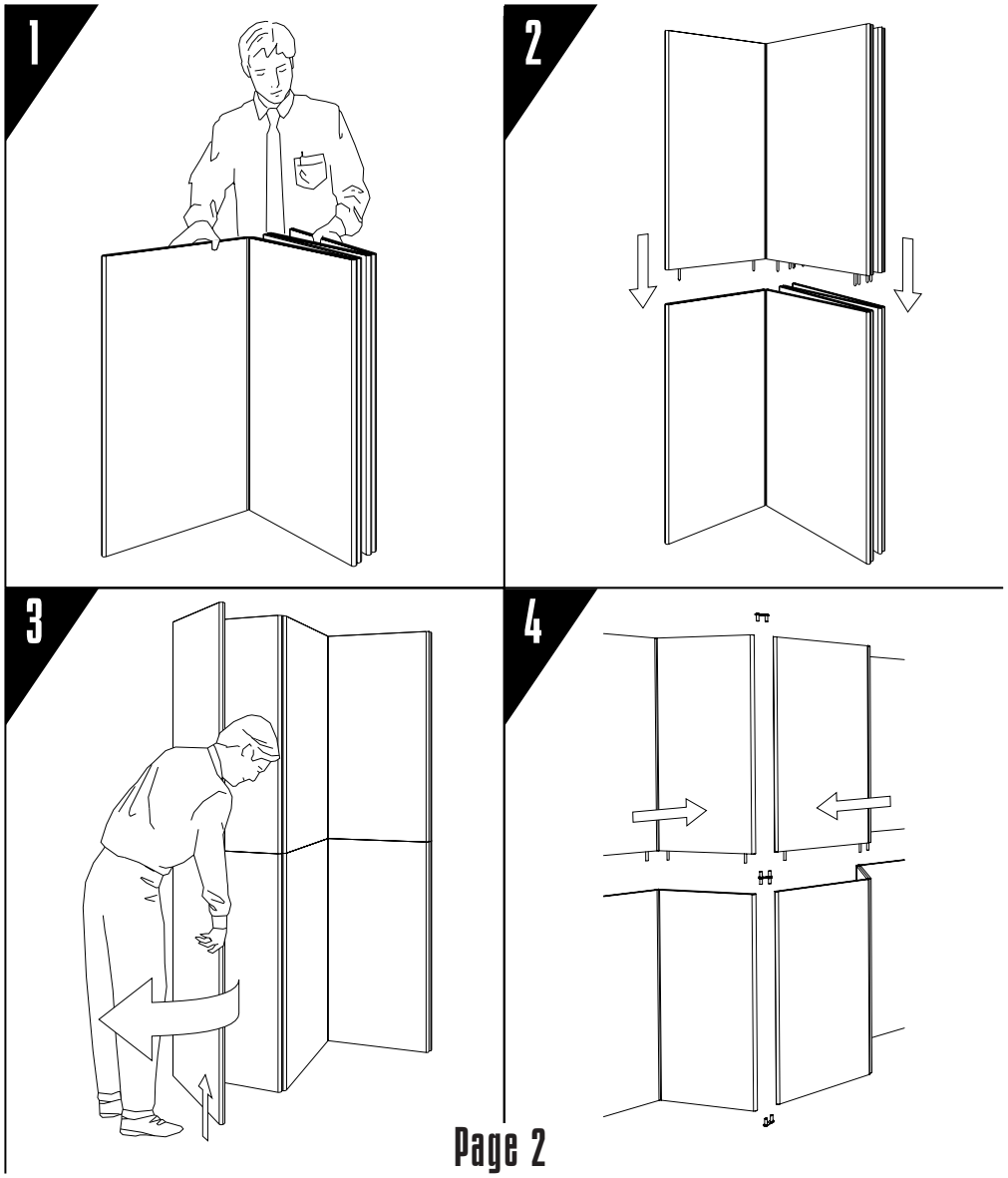

BACKWALL ASSEMBLY

1. Position bottom panels (holes up). Adjust panels so edges are even. Partially open one panel for stability.

2. Lift upper panels onto bottom panels. Insert pegs in holes in bottom panels.

3. Open backwall to desired configuration. ”Walk” the panels to desired position: lift the bottom outer panel slightly and push on bottom of system only. Maintain right angle on one panel to ensure stability while opening system.

4. For units consisting of more than one backwall section, connect together using supplied U-clips at top and bottom, and H-clip in middle.

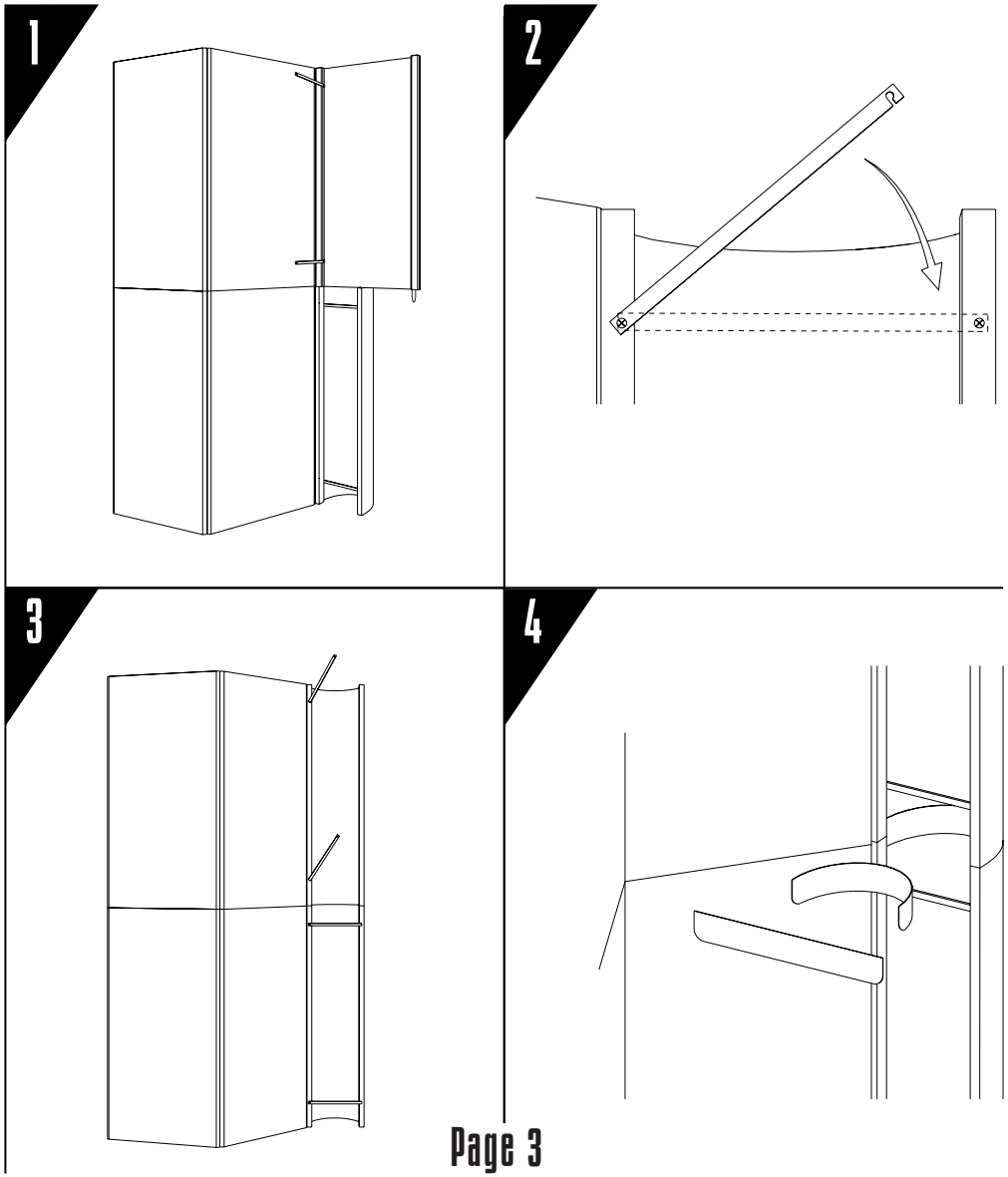

CURVED PANELS

1. After setting up backwall, bend lower curved panel.
2. Rotate support bars to lock onto screw pegs.
3. Repeat steps for all support bars.
4. Flex tongue and velcro in place behind seam between panels.

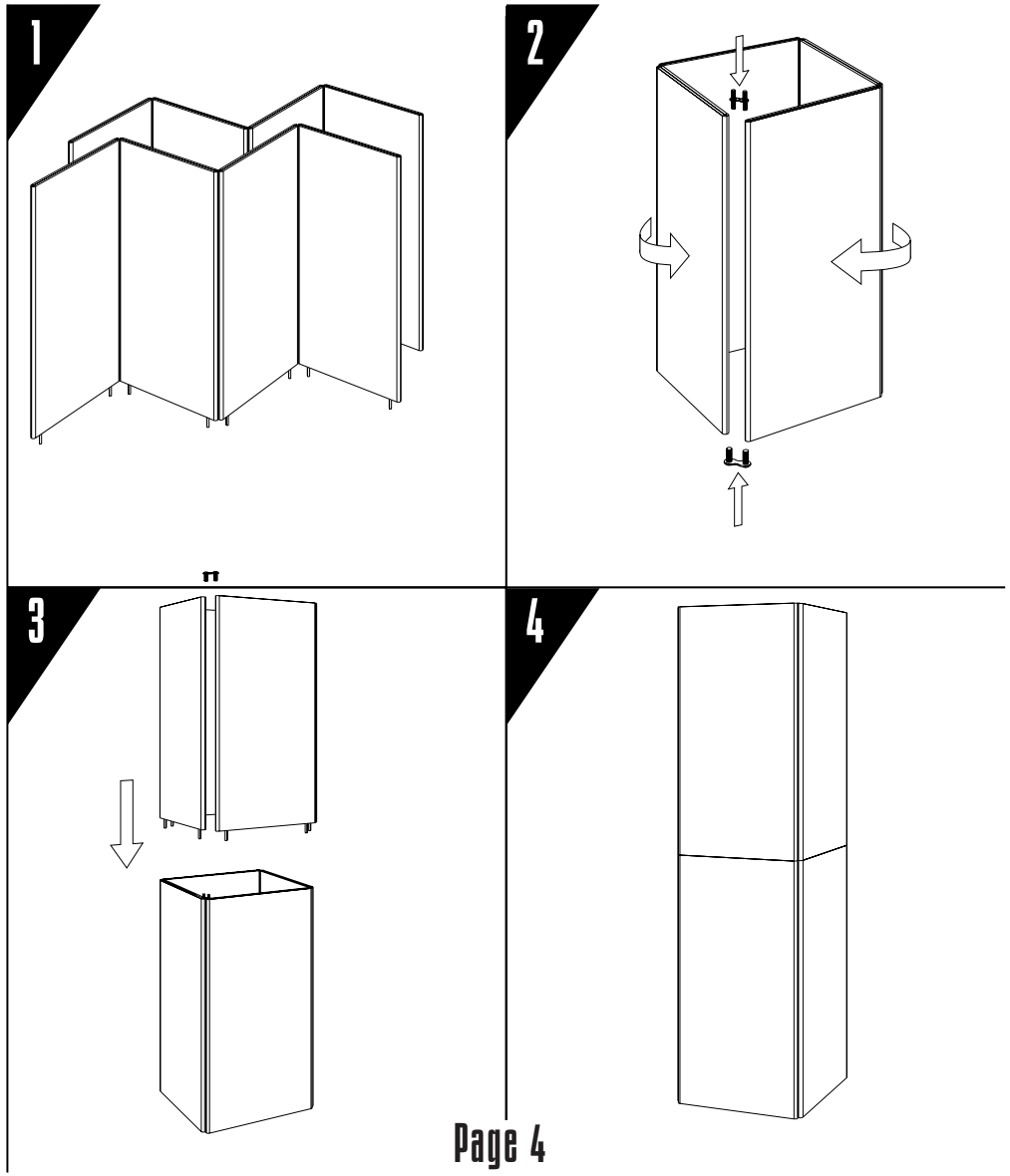

ST8
SQUARE TOWER

1. Unfold panels (with holes up). Fold panel sections to form squares.

2. Fasten bottom section with a U-clip on the bottom and an H-clip on the top.

3. Position top section (with pegs down) onto bottom section. Insert U-clip on top.

4. Assembled unit.

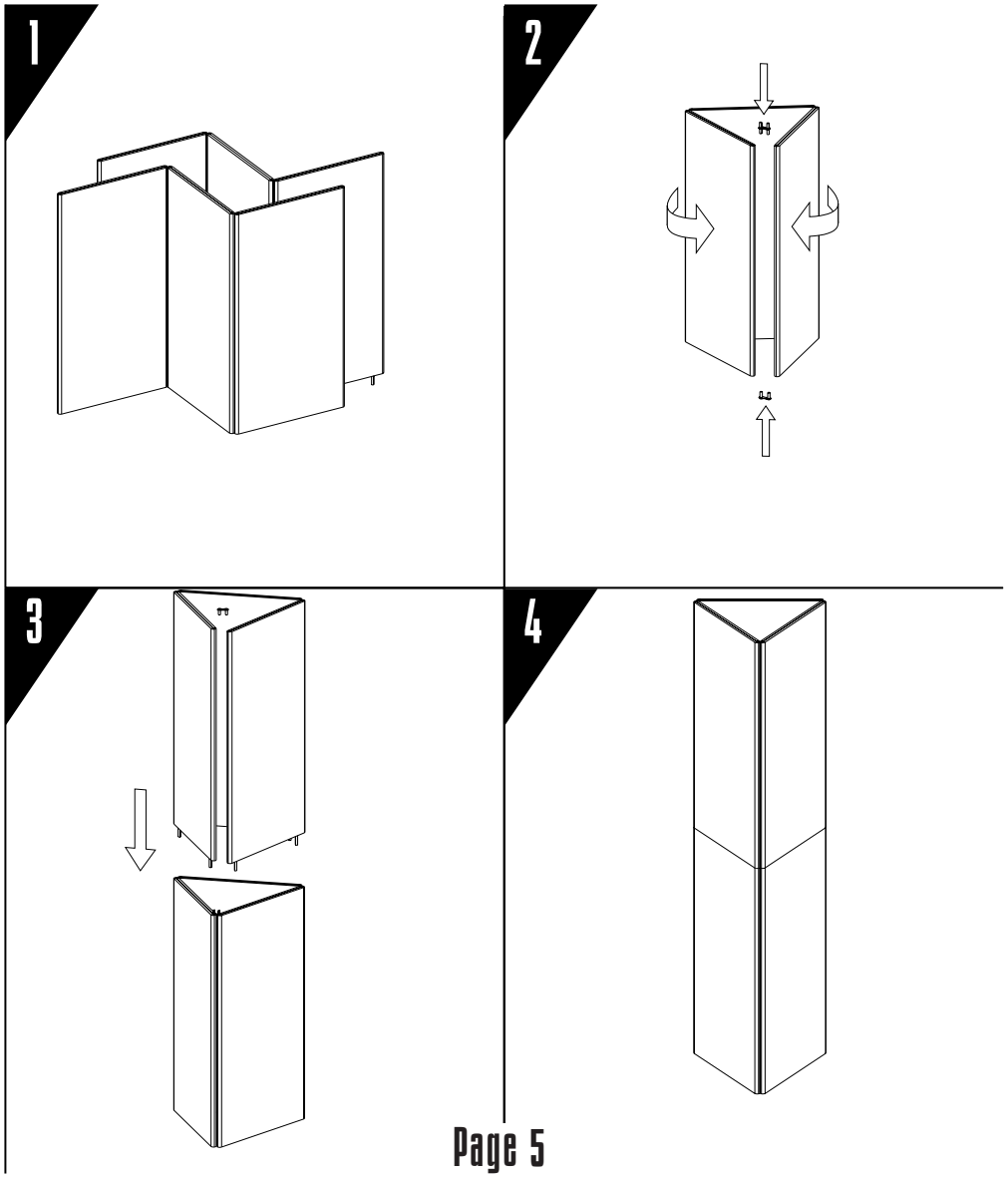

TT6
TRIANGULAR TOWER

1. Unfold panels (with holes up). Fold panel sections to form triangles.

2. Fasten bottom section with U-clip on bottom and H-clip on top.

3. Position top section with pegs down. Insert U-clip on top.

4. Assembled unit.

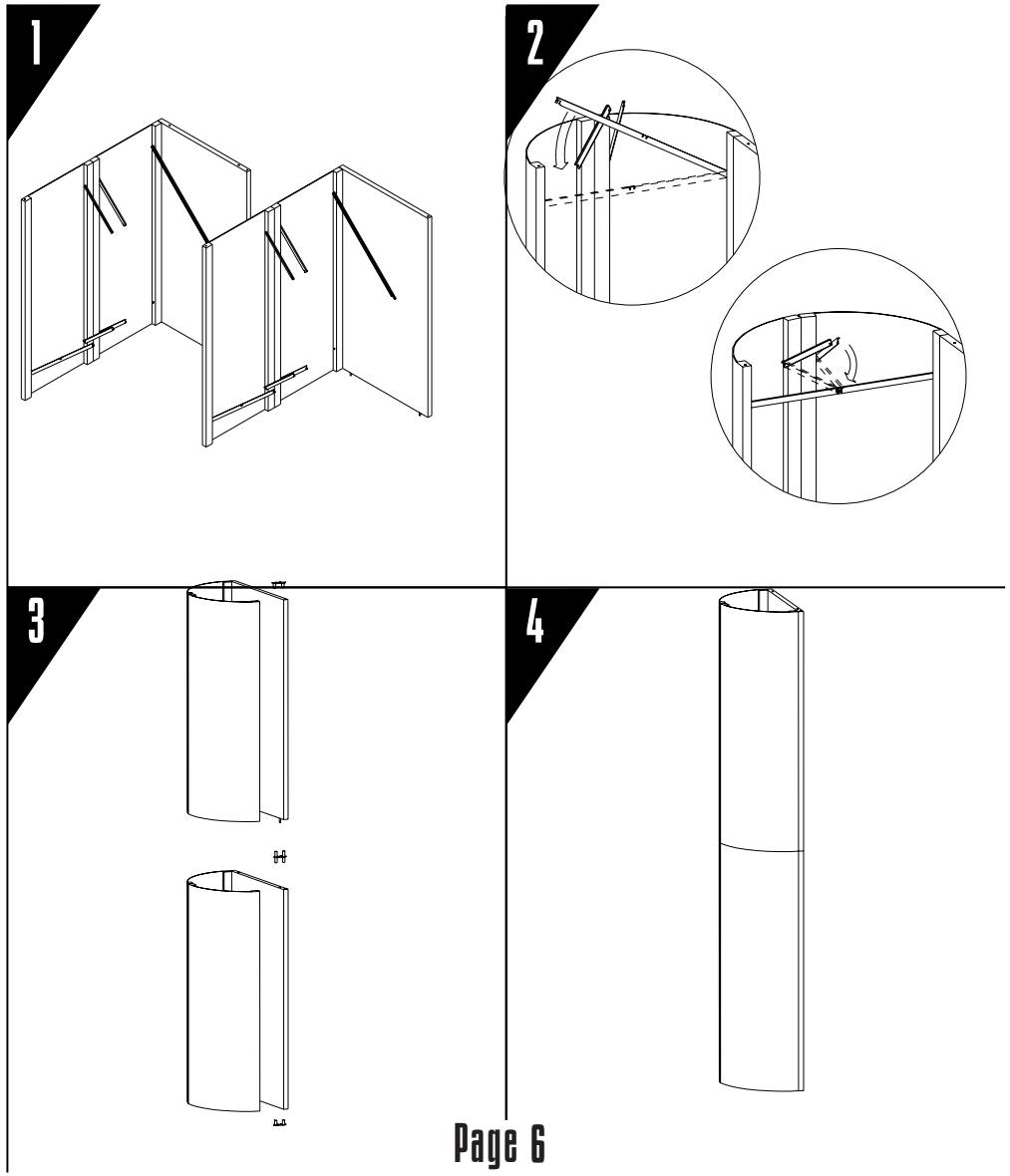

RT
RADIUS TOWER

1. Unfold panels as shown.

2. Flex curved panels and latch long support rods. Short support rods fold down to fit in notches in long rods.

3. Stack the panel sections, fastening the ends of the curved panels to the flat panels with U-clips at the top and bottom and an H-clip in the middle. The upper flat panel has pegs on the bottom that fit into corresponding holes in the top of the lower panel.

4. Assembled unit.

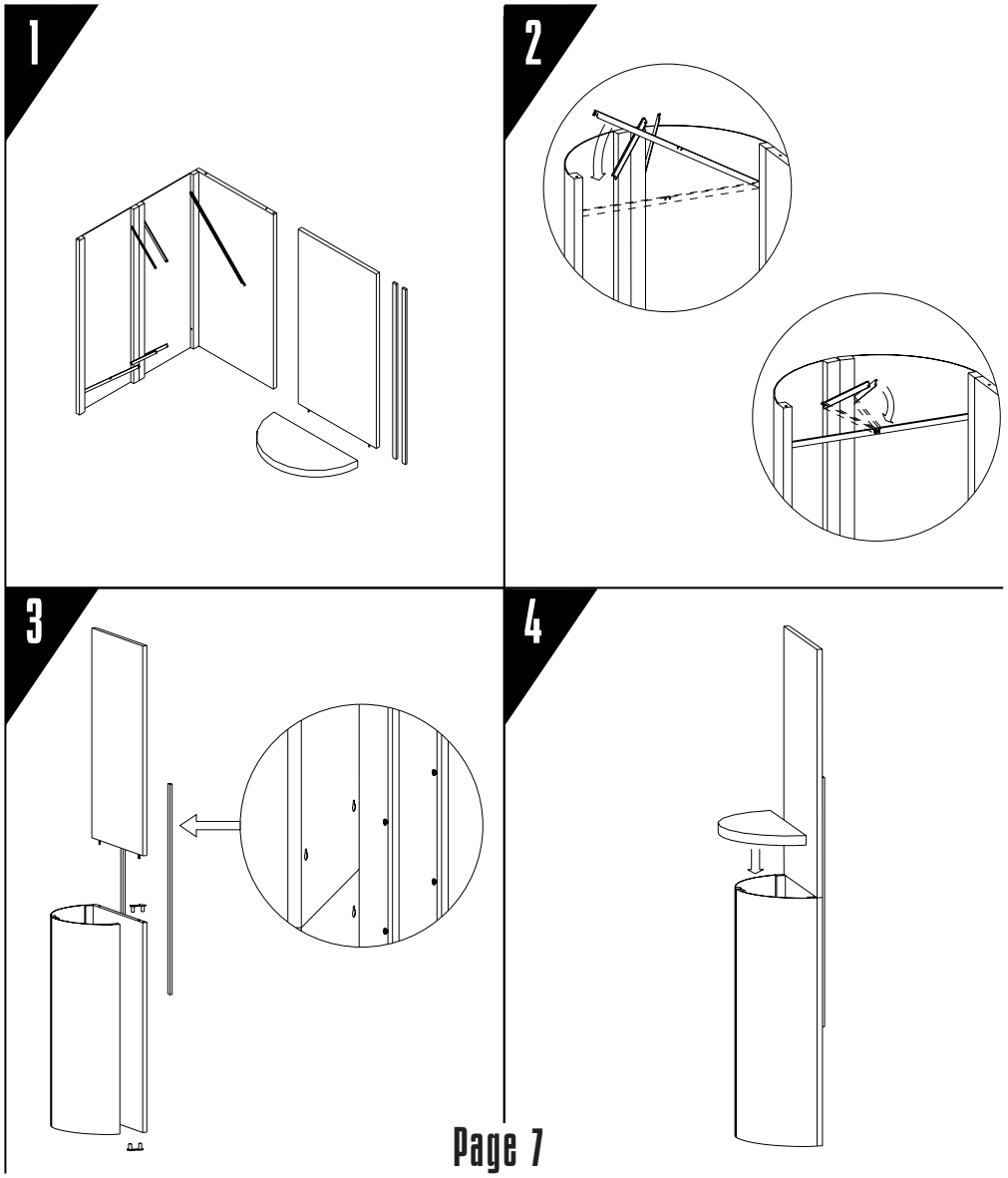

RDC1
RADIUS DISPLAY CASE - OPEN

1. Unpack components and unfold panels.

2. Flex curved panels and latch long support rods. Short support rods fold down to fit in notches in long rods.

3. Attach the end of the curved panels to the flat panel with a U-clip at the top and bottom. Stack the upper flat panel on top of the lower one. It has pegs that fit in corresponding holes in the lower panel. Install a pair of support bars in the back. They have bolt heads that fit into keyhole slots in back of the panels. Push down firmly on support bars.

4. Rest countertop on top of curved panels.

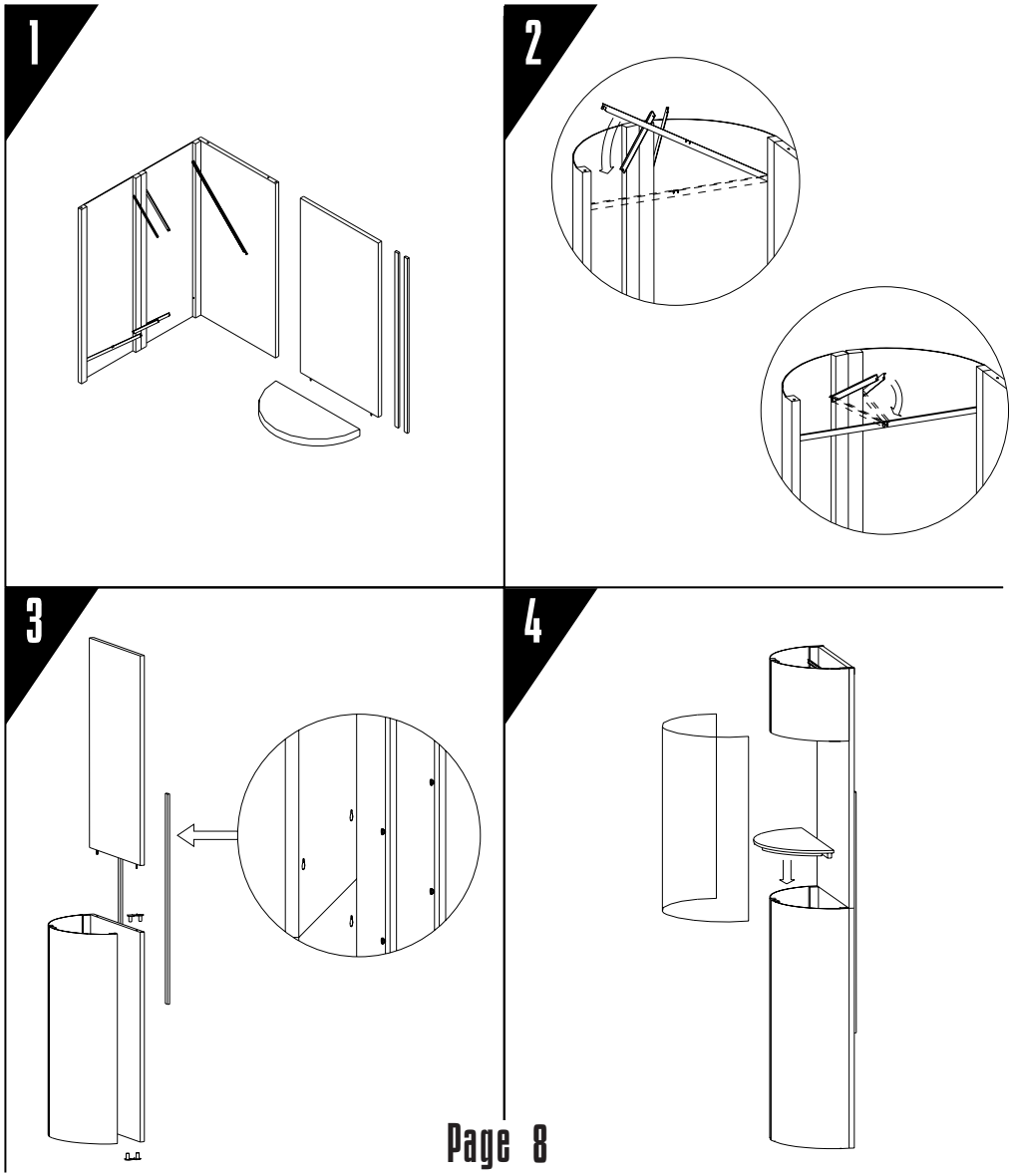

RDC2

RADIUS DISPLAY CASE - CLOSED

1. Unpack components and unfold panels.

2. Flex curved panels and latch long support rods. Short support rods fold down to fit in notches in long rods.

3. Attach the end of the curved panels to the flat panel with a U-clip at the top and bottom. Stack the upper flat panel on top of the lower one. It has pegs that fit in corresponding holes in the lower panel. Install a pair of support bars in the back. They have bolt heads that fit into keyhole slots in back of the panels. Push down firmly on support bars.

4. Rest countertop on top of curved panels. Set up radius sconce, as explained on the next page, and hang from upper panel. Flex lexan window, and velcro in place between curved panels and sconce.

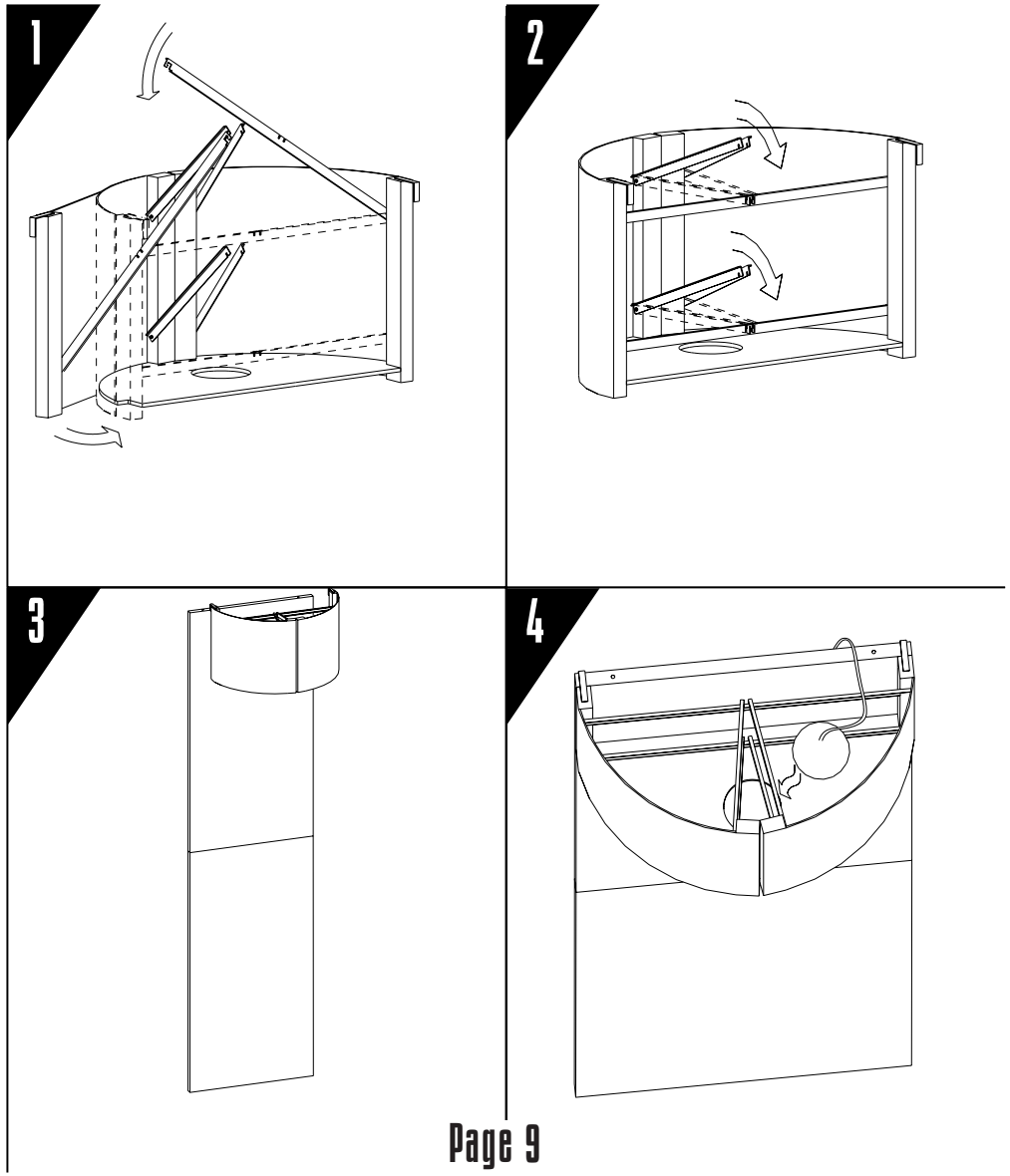

RSC
RADIUS SCONCE

1. Wrap sconce panels around diffuser, and latch long support bars. Diffuser should be held tightly in place.

2. Short support bars fold down to fit in notches in long bars.

3. Hang sconce from backwall.

4. Position ball light over hole in diffuser. Lower support bar will have to be unlatched to accommodate ball light.

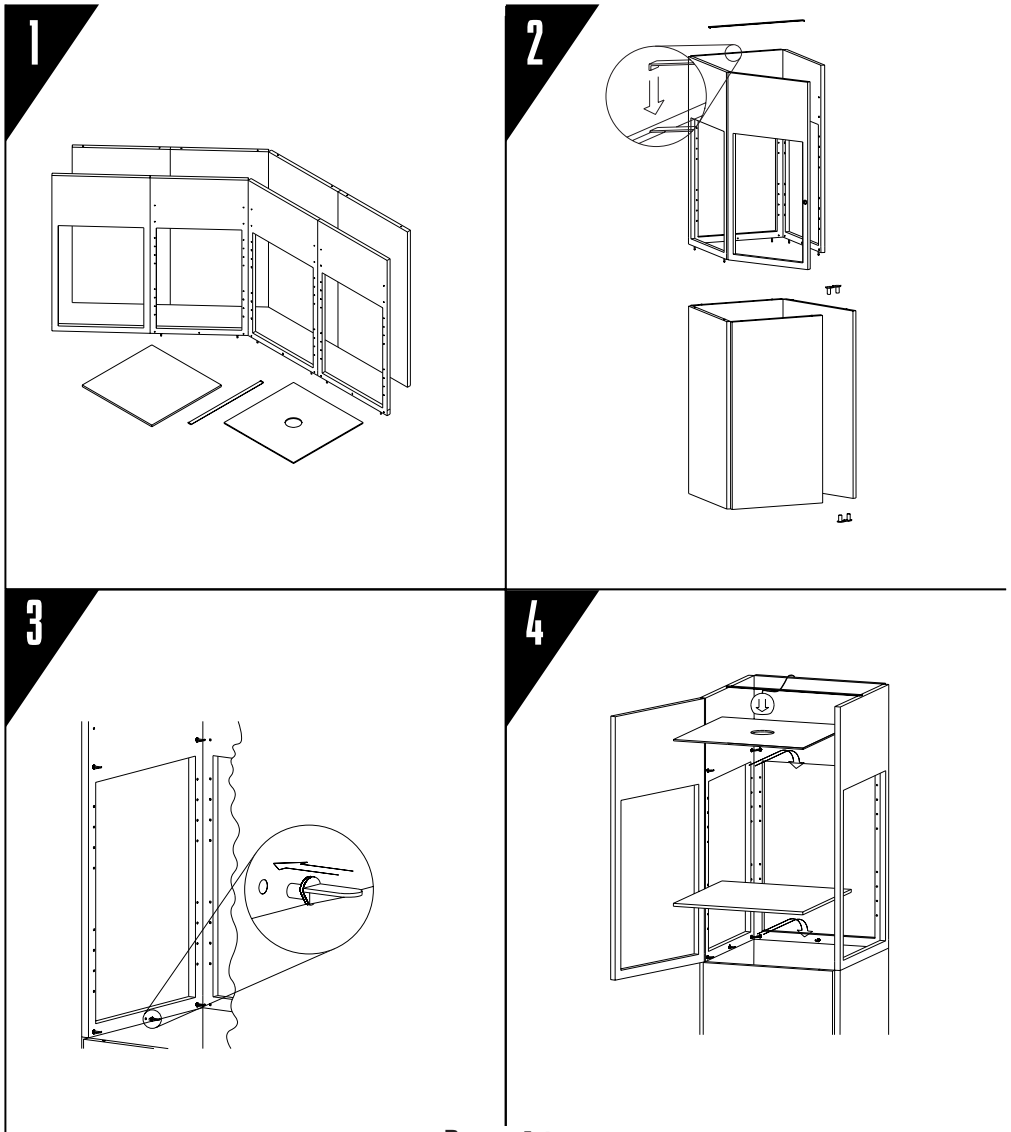

SDC
SQUARE DISPLAY CASE

1. Unpack components and unfold panels.

2. Fold bottom panel section into square, and fasten with U-clips at the top and bottom. Stack upper panel section on top. It has pegs on the bottom that correspond to holes on the top of the lower section. Position stabilizer bar. It's flanges go in grooves on top of the upper panels. Make sure base is "square".

3. Insert 5 shelf support pegs into panels shown. Repeat for other panels excluding door panel.

4. Set countertop and ceiling in place. Position ball light over hole in ceiling.

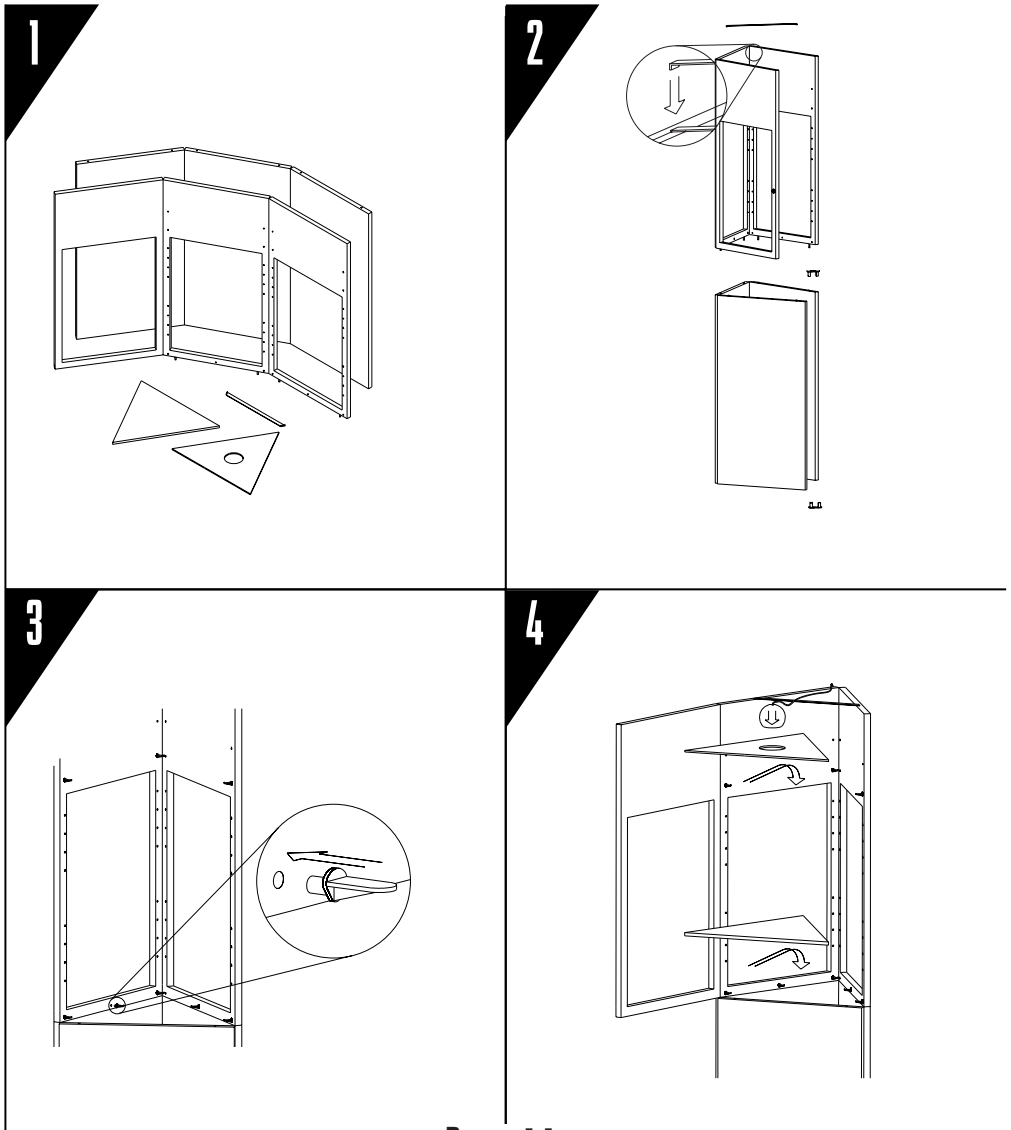

TDC
TRIANGULAR DISPLAY CASE

1. Unpack components.

2. Fold bottom panel section into triangle, and fasten with U-clips at the top and bottom. Stack upper panel section on top. It has pegs on the bottom that correspond to holes on the top of the lower section. Position stabilizer bar. It's flanges go in grooves on top of the upper panels.

3. Insert 5 shelf support pegs into the left panel as shown. Only 3 are used on the right panel, since the ones in the back would interfere with the ones on the left.

4. Set countertop and ceiling in place. Position ball light over hole in ceiling.

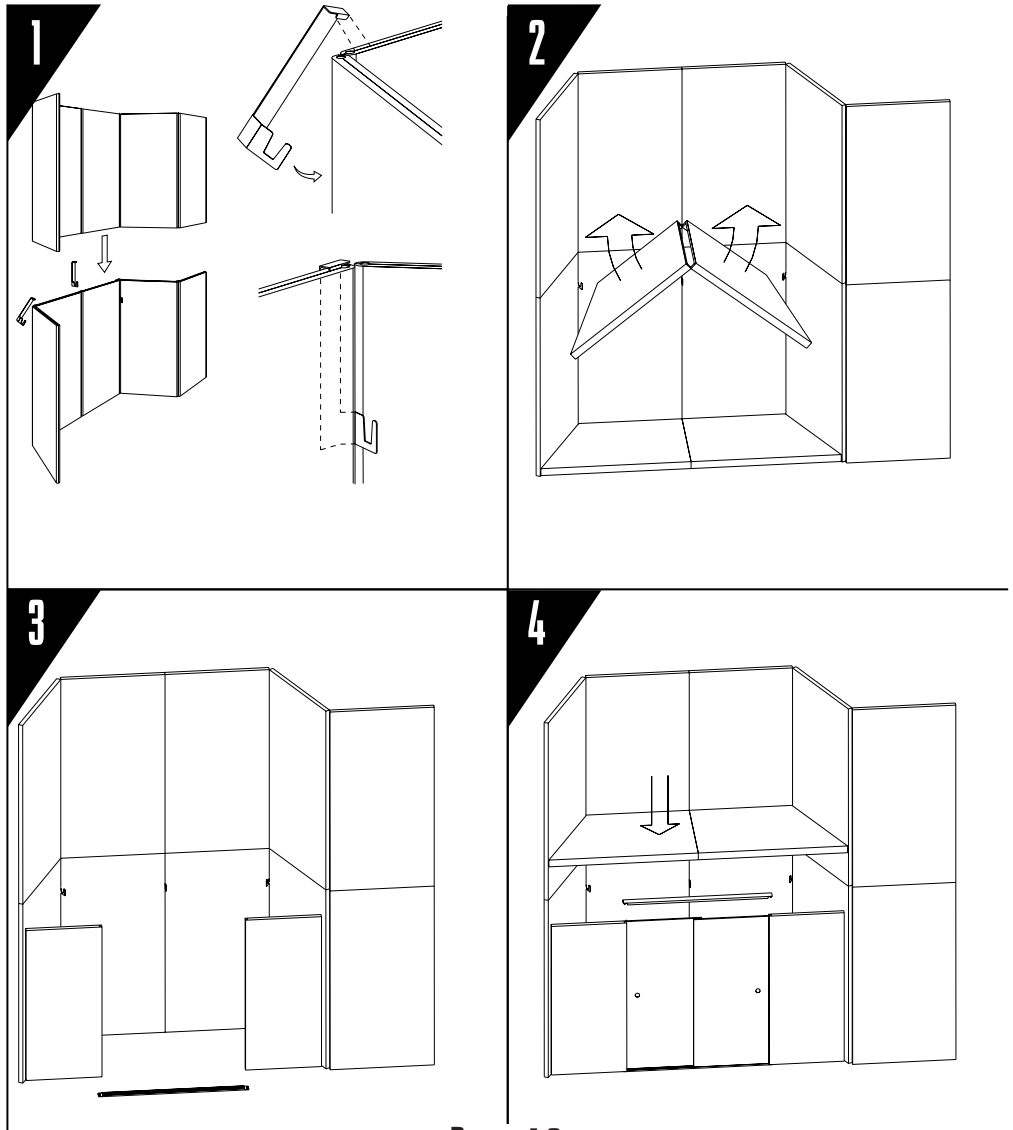

A1

ALCOVE COUNTER - 2 PANEL BASE

1. Insert left, right, and middle shelf support brackets between panels. Set upper panels down onto lower panels.

2. Unfold and latch alcove shelf. Set shelf on floor and use as a template for laying out panels. When panels are flush with edges of shelf, remove the shelf.

3. Set lower door track in place between alcove end panels. The panels attach to the backwall with velcro tabs.

4. Set sliding doors in place, and insert upper door track. Rest counter in place.

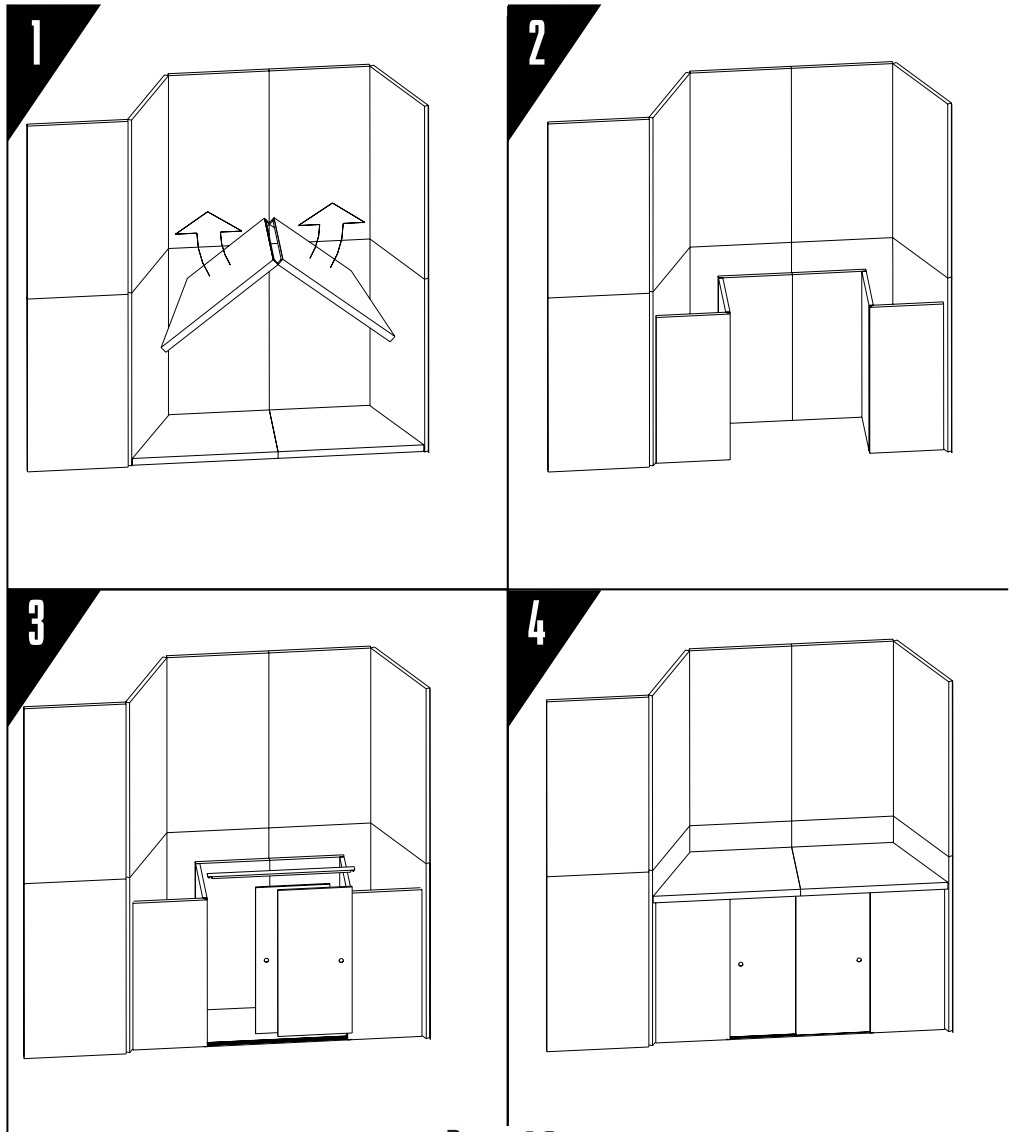

A1

ALCOVE COUNTER - 6 PANEL BASE

1. Unfold countertop and fasten latch on underside. Rest on floor, and use as a template to position the backwall panels at the proper angles.

2. Remove countertop, and position 6 panel base as shown. The side panels fasten to the backwall with velcro tabs.

3. Insert lower and upper door track.

4. Rest countertop on base and position doors in place.

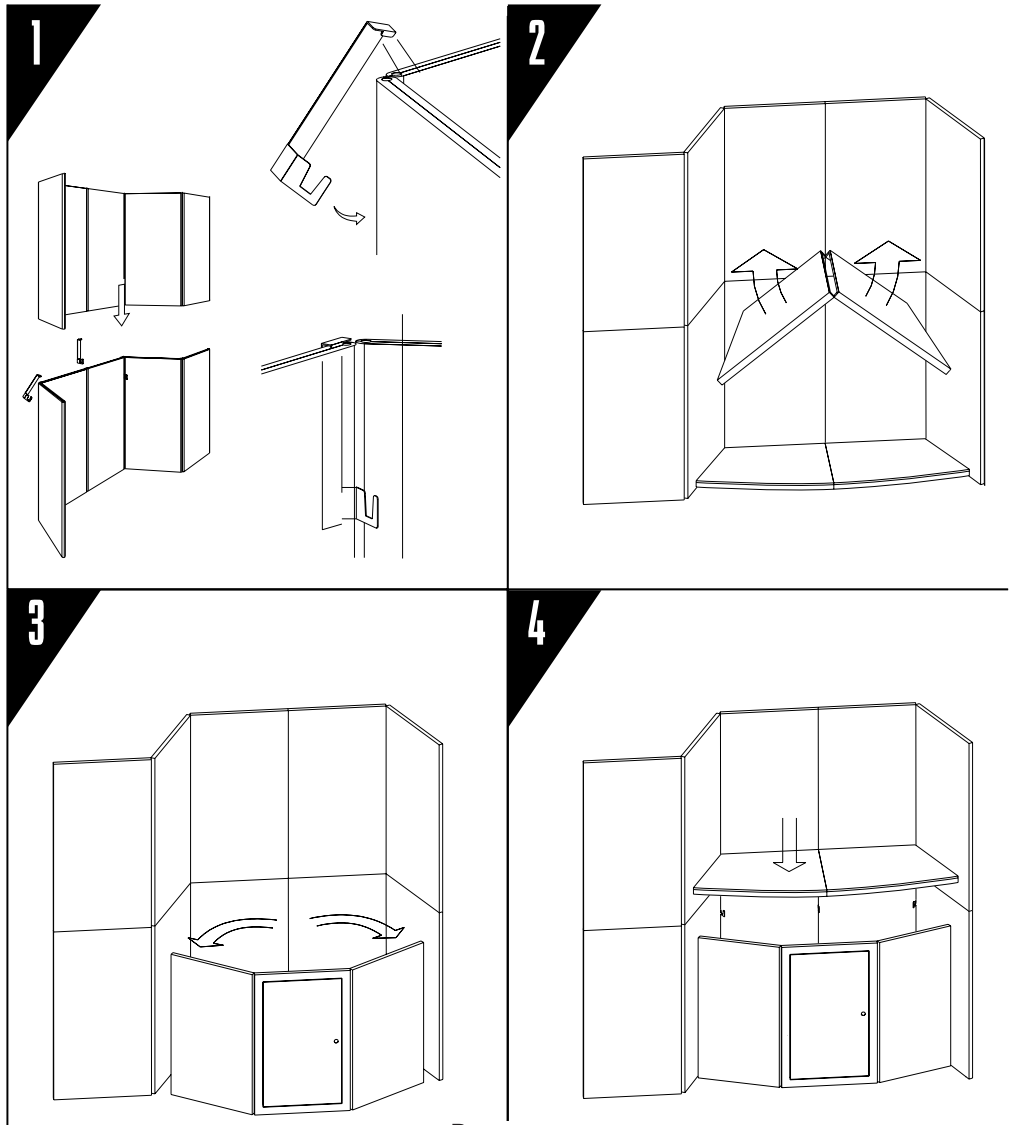

A1

ALCOVE COUNTER - HINGED BASE

1. Insert left, right, and middle shelf support brackets between panels. Set upper panels down onto lower panels.

2. Unfold and latch alcove shelf. Set shelf on floor and use as a template for laying out panels. When panels are flush with edges of shelf, remove the shelf.

3. Unfold 3-panel base with door opening outward. The left and right panels attach to the backwall with velcro tabs.

4. Rest counter in place.

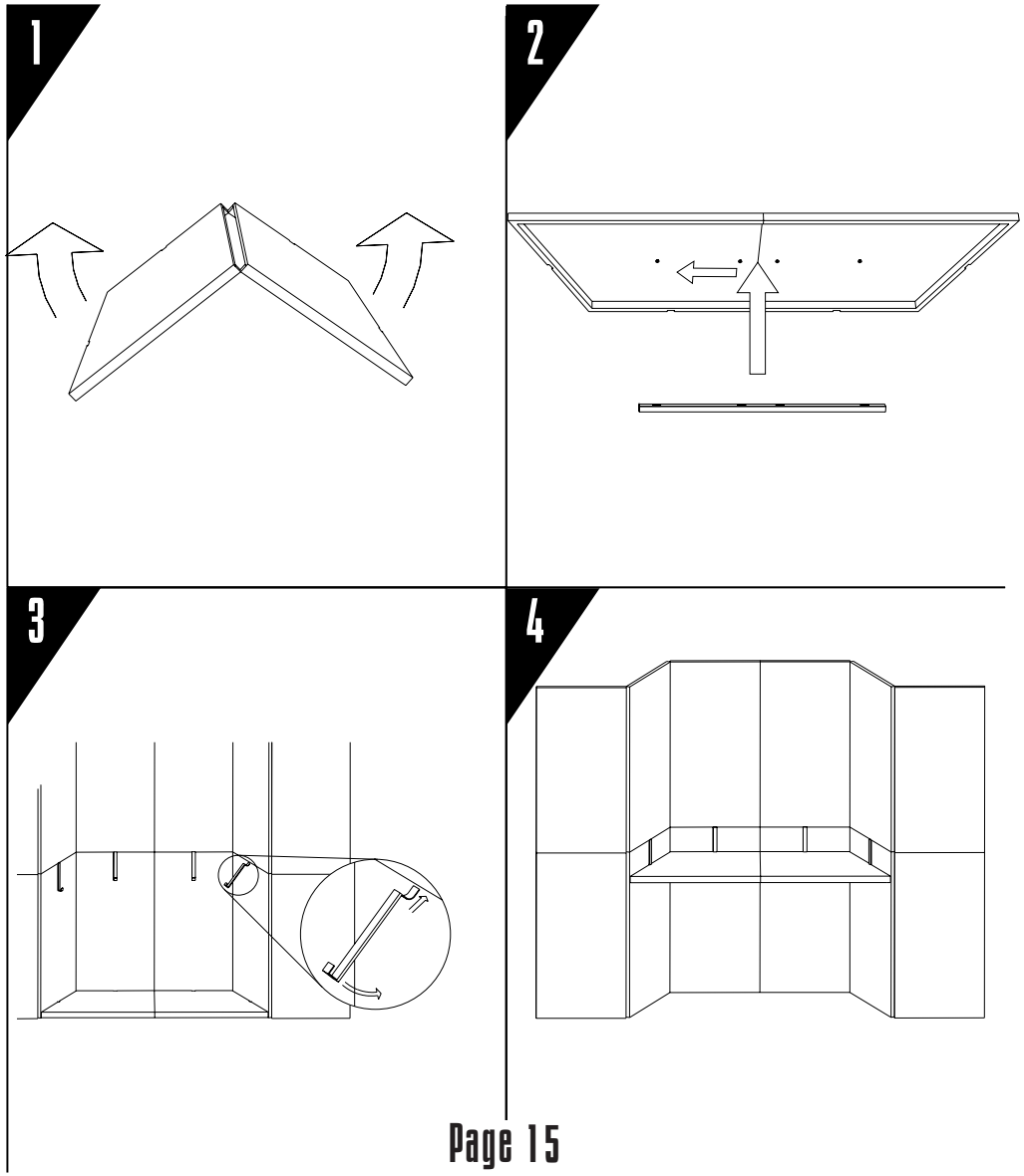

A1

ALCOVE COUNTER - FREESTANDING

1. Unfold countertop.

2. Slide support bar onto bottom. It has keyhole slots that fit over the heads of bolts that stick out slightly.

3. Lay countertop on floor, and use as a template to position the backwall panels at the proper angles. Insert 4 shelf support brackets into backwall as shown.

4. Hang countertop from brackets.

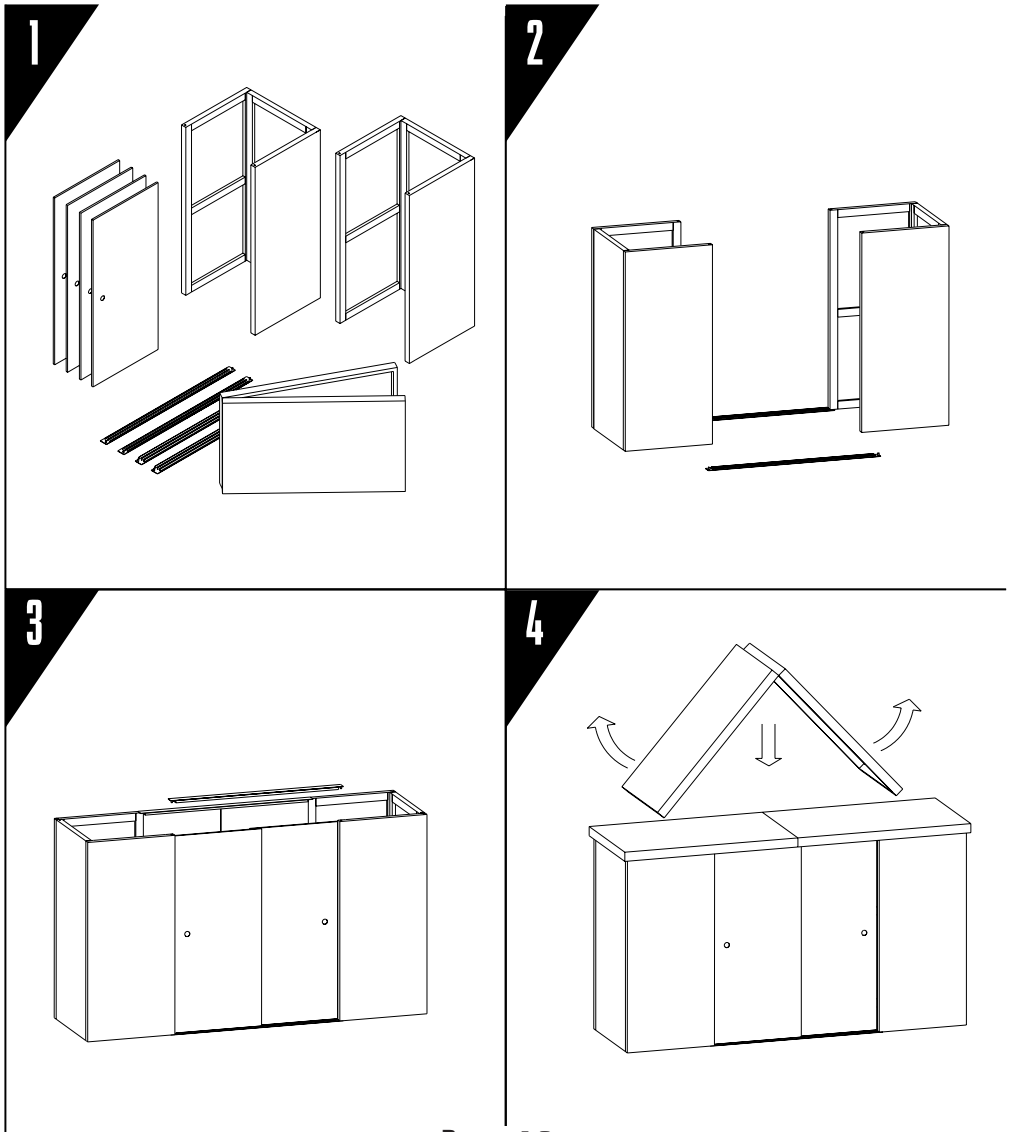

K1

SQUARE KIOSK COUNTER

1. Unpack components. Panels are marked on the inside which way is up.

2. Arrange panels as shown. Fasten them together with the lower door tracks.

3. Insert sliding doors, and upper door tracks.

4. Unfold countertop, fasten latches on lower side, and rest on base.

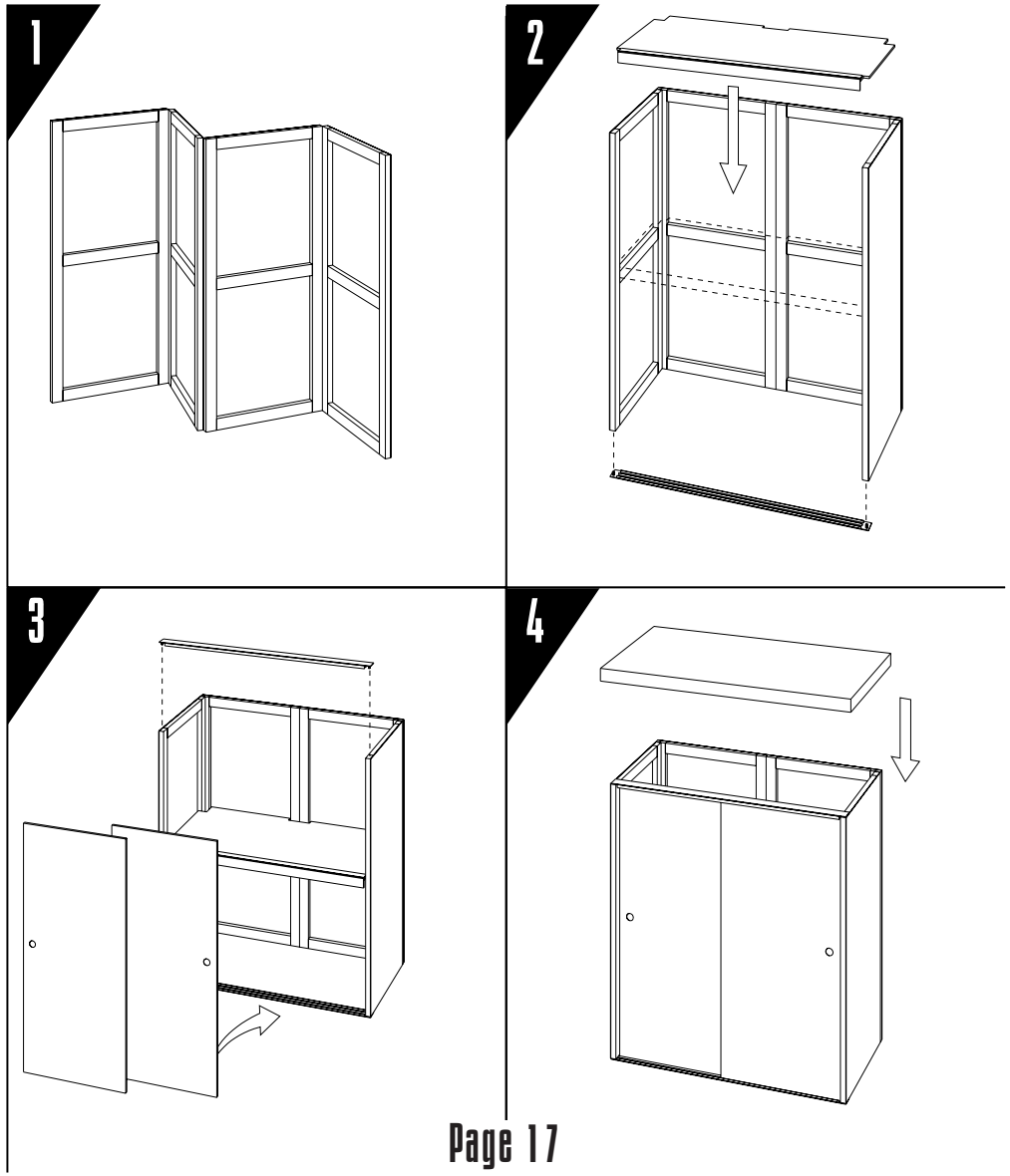

C1
RECTANGULAR COUNTER

1. Unfold panels to form front and sides of counter.

2. Position bottom sliding door track. Rest inner shelf on rails on insides of panels.

3. Position doors in bottom track and insert top track over them.

4. Position countertop on unit.

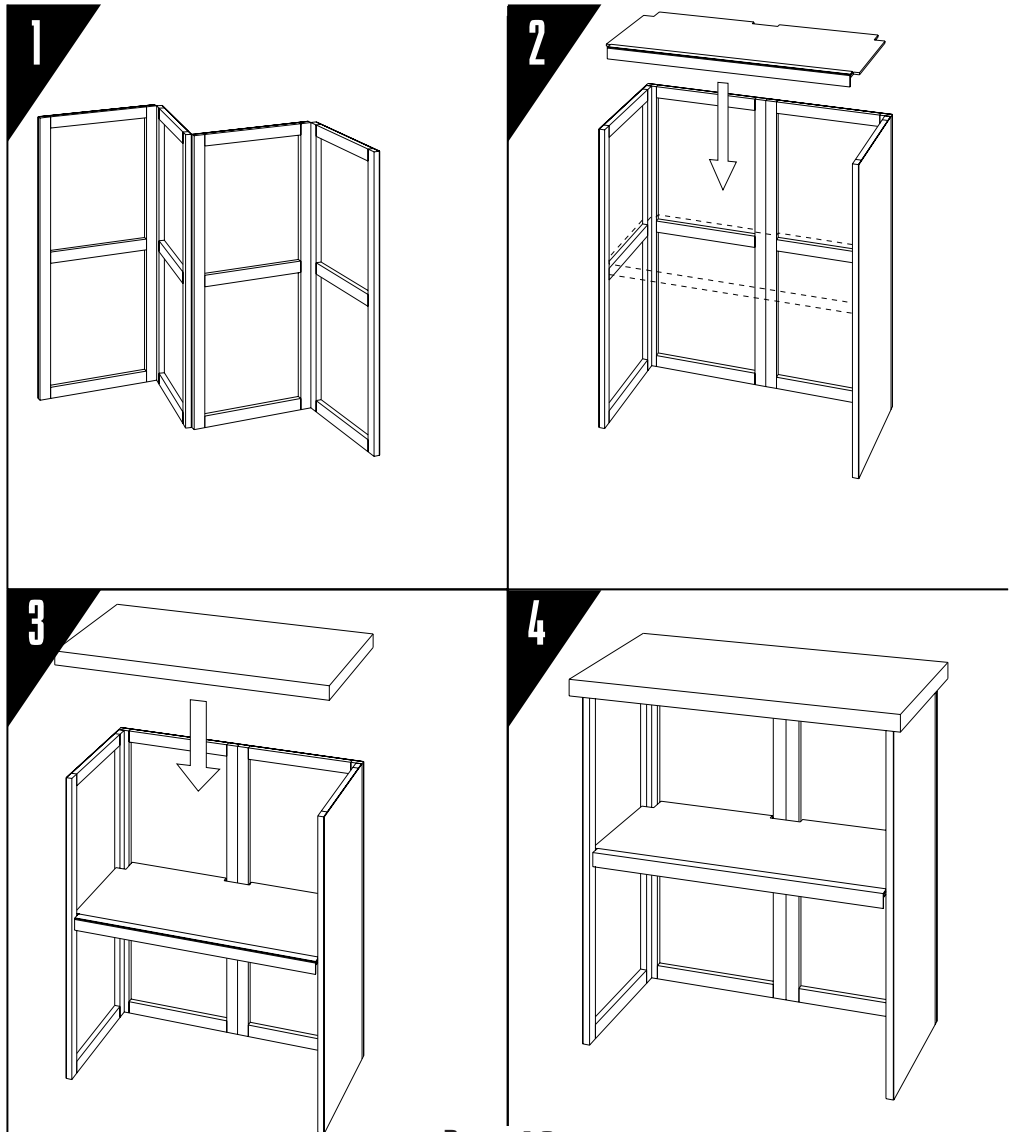

C2
RECTANGULAR COUNTER

1. Unfold panels to form front and sides of counter.
2. Position inner shelf on rails on insides of panels.
3. Position countertop.
4. Assembled unit.

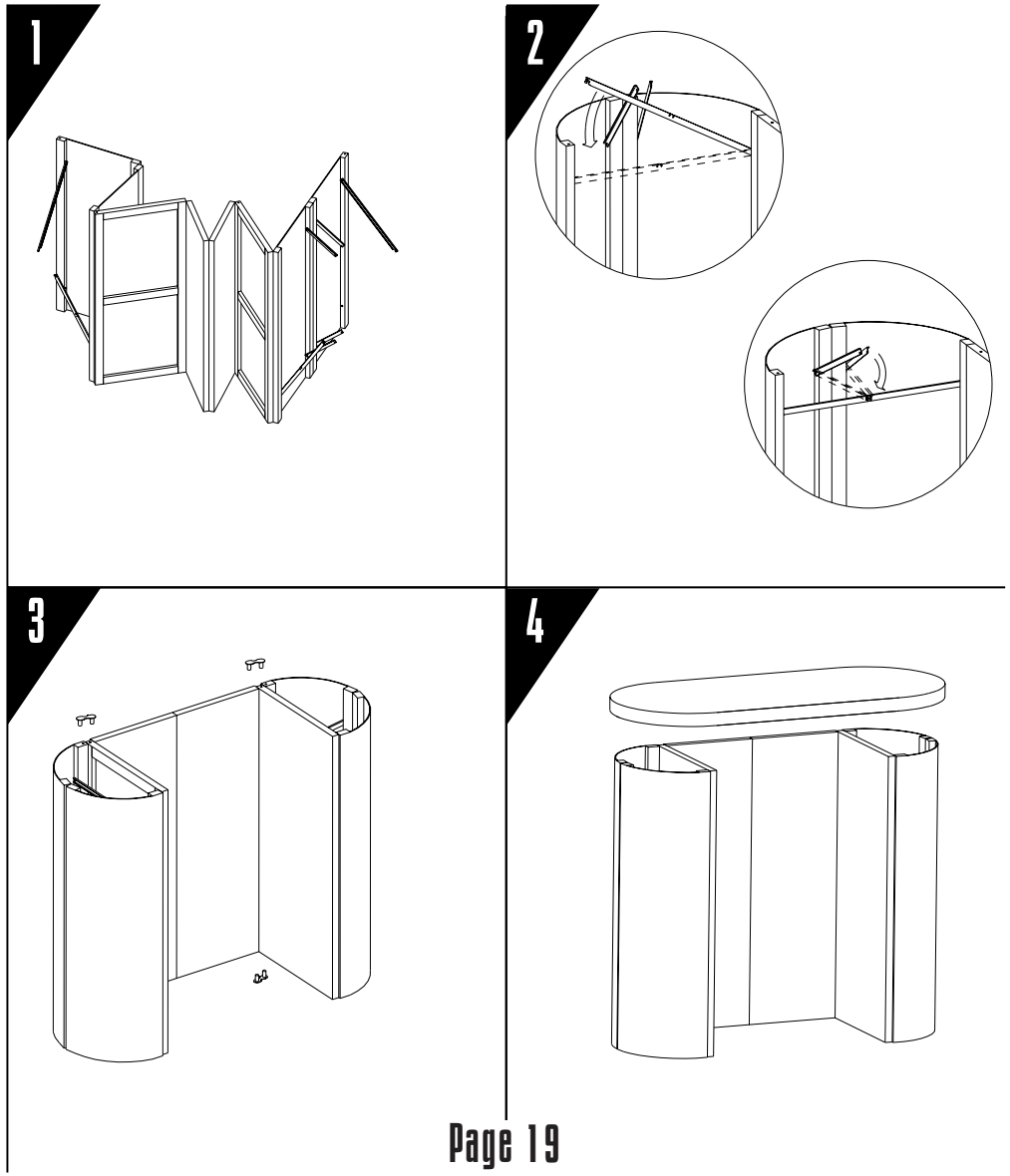

D30/D38 DESKS

1. The D30 and D38 are identical, except for the height of the base. A D38 is pictured. To begin, unfold panels as shown.

2. Flex curved panels and latch long support rods. Short support rods fold down to fit in notches in long rods.

3. Fold panels to configuration shown. Fasten ends of curved panels to unit with U-clips on the top and bottom.

4. Rest countertop on base.

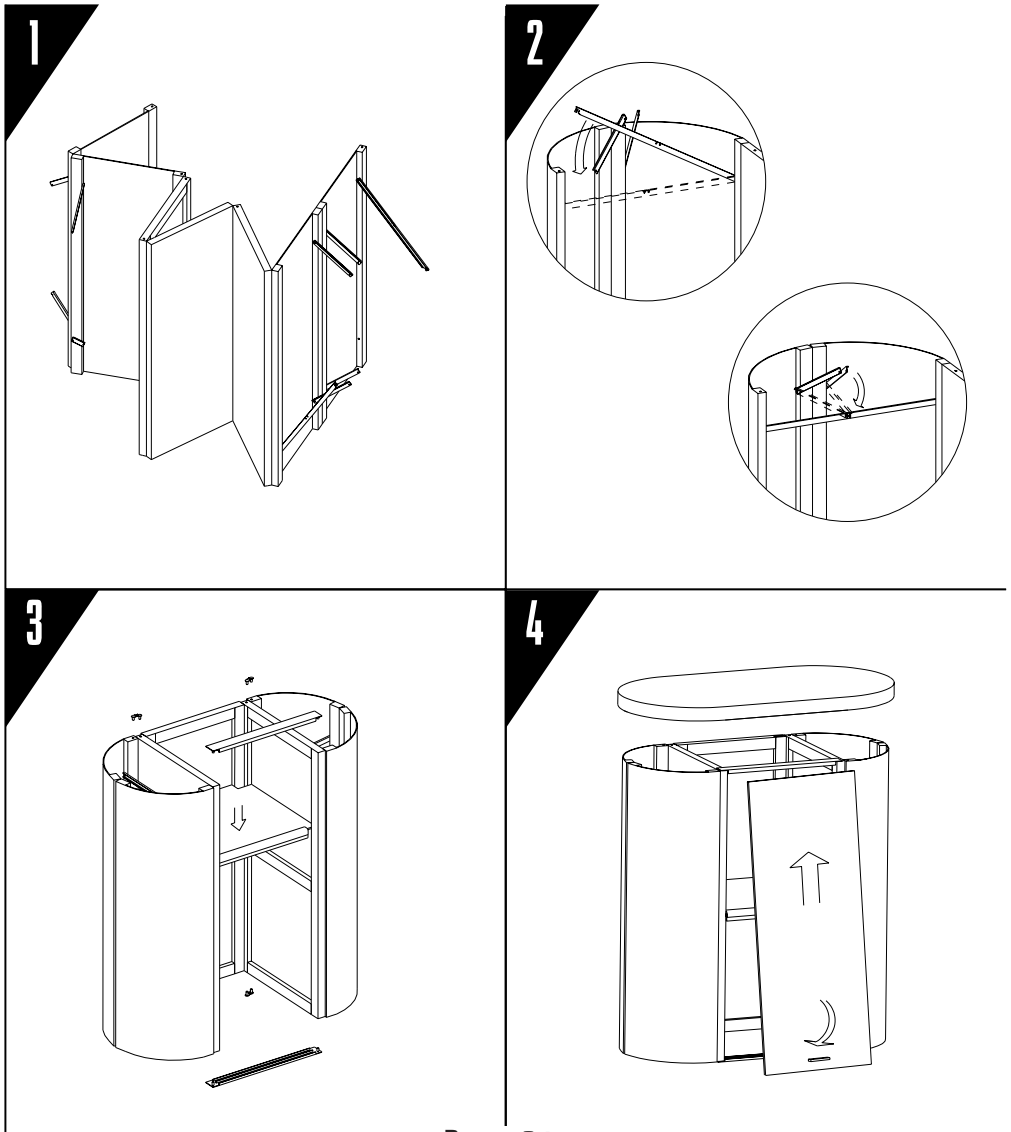

RC w/ LIFT-OUT DOOR
RADIUS COUNTER

1. Unfold panels.

2. Flex curved panels and latch long support rods. Short support rods fold down to fit in notches in long rods.

3. Fold panels to configuration shown. Fasten ends of curved panels to unit with U-clips on the top and bottom. Position shelf. Insert upper and lower door tracks.

4. Rest countertop on base and insert lift out door.

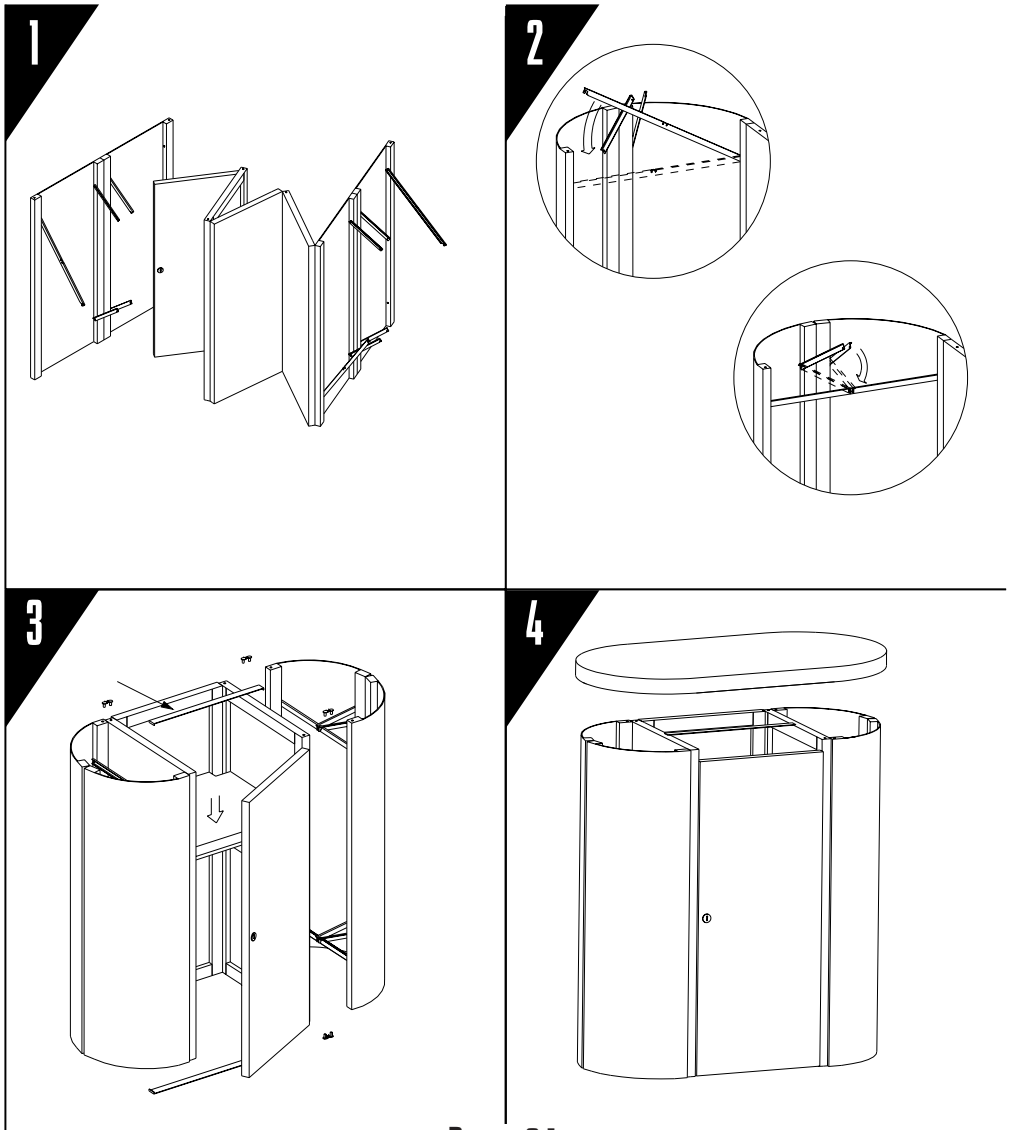

RC w/ HINGED DOOR RADIUS COUNTER

1. Unfold panels.

2. Flex curved panels and latch long support rods. Short support rods fold down to fit in notches in long rods.

3. Fold panels to configuration shown. Fasten curved panels to unit with U-clips at the top and bottom in three locations (some lower clips concealed in image). Lower the shelf into place. Insert the upper and lower stabilizer bars. The flanges on the ends of the bars go into the grooves in the center of the panels.

4. Rest countertop on base.

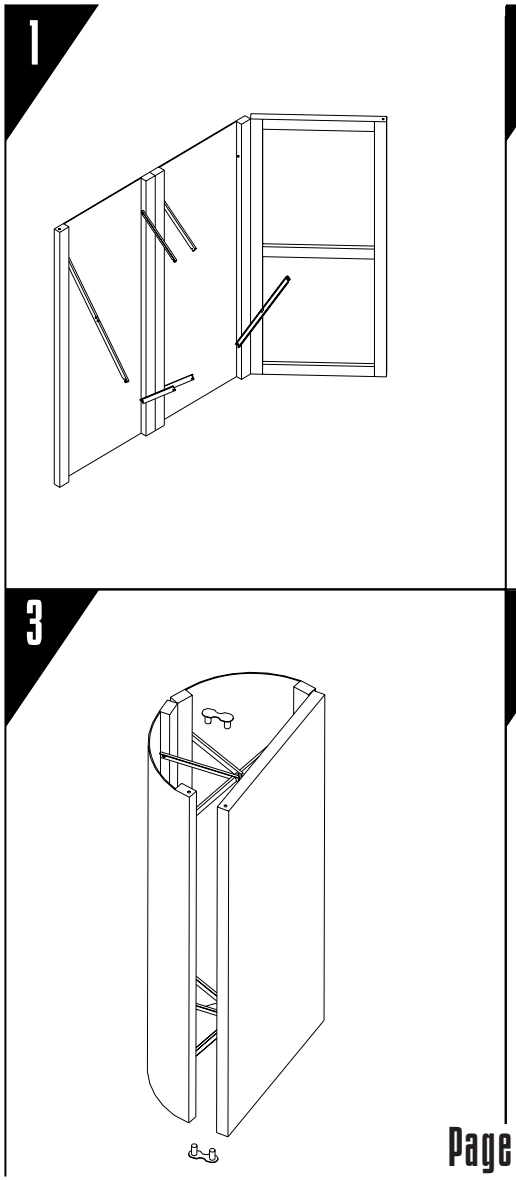

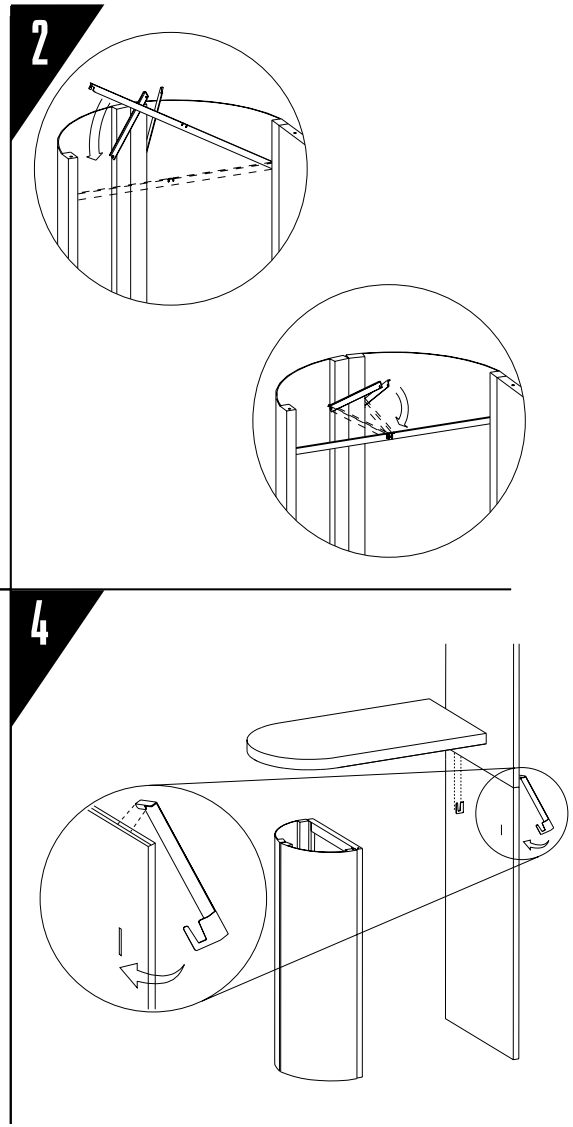

RPC1
RADIUS PENINSULA COUNTER

1. Unfold panels as shown.

2. Flex curved panels and latch long support rods. Short support rods fold down to fit in notches in long rods.

3. Fold panels to close unit. Insert a U-clip in the top and bottom to hold panels together.

4. Insert hanging brackets from the rear of the backwall and push through slots. Position base as shown. Rest countertop between base and brackets.

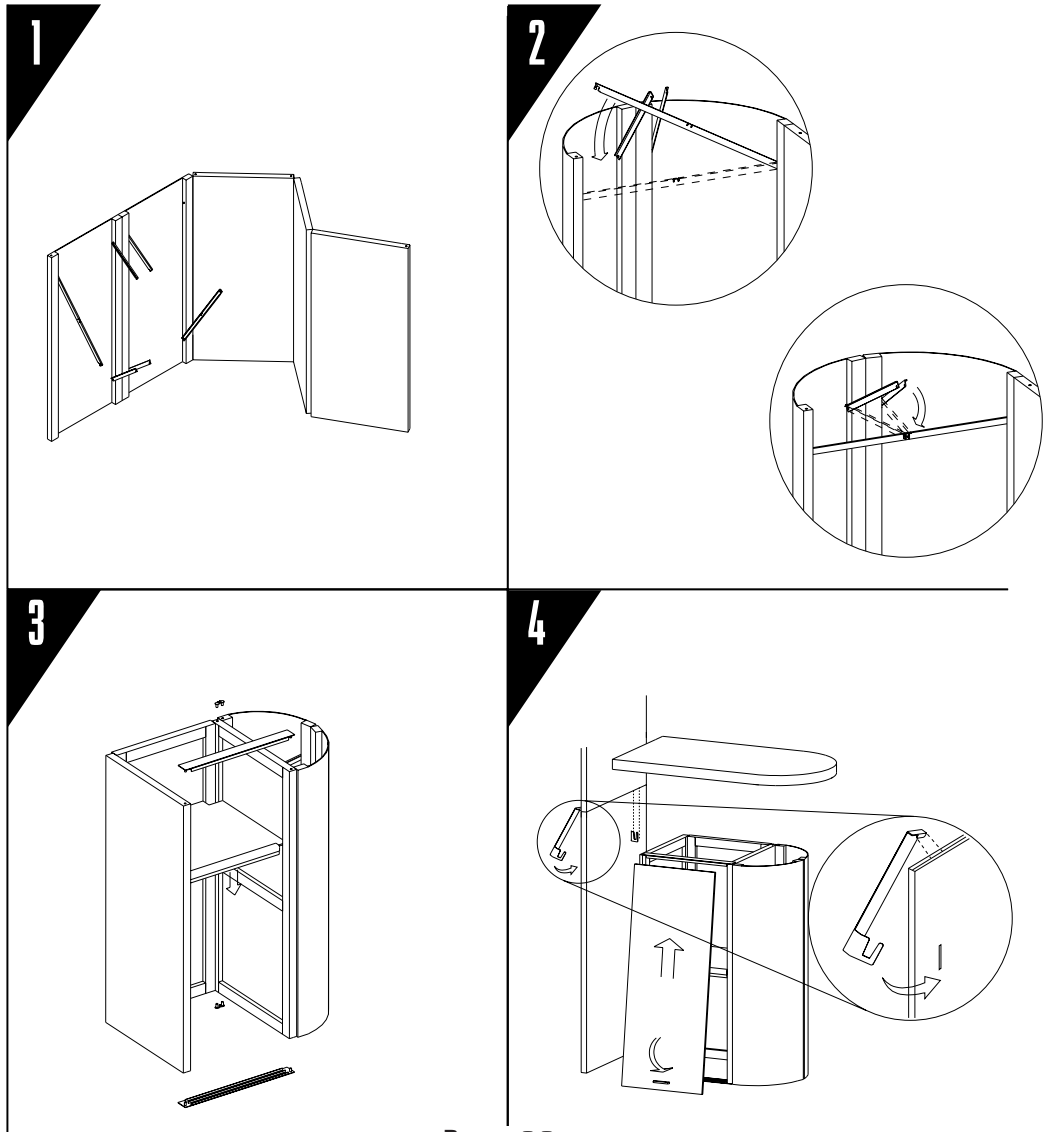

RPC2 w/ LIFT-OUT DOOR
RADIUS PENINSULA COUNTER

1. NOTE: Some units may be mirror images of this one, with the door on the other side. Unfold panels as shown.

2. Flex curved panels and latch long support rods. Short support rods fold down to fit in notches in long rods.

3. Fold panels to configuration shown. Insert a U-clip in the top and bottom to hold the end of the curved panels in place. Insert the upper and lower door tracks. Install the shelf.

4. Insert hanging brackets from the rear of the backwall and push through slots. Position base as shown. Rest countertop on base and brackets. Insert lift out door.

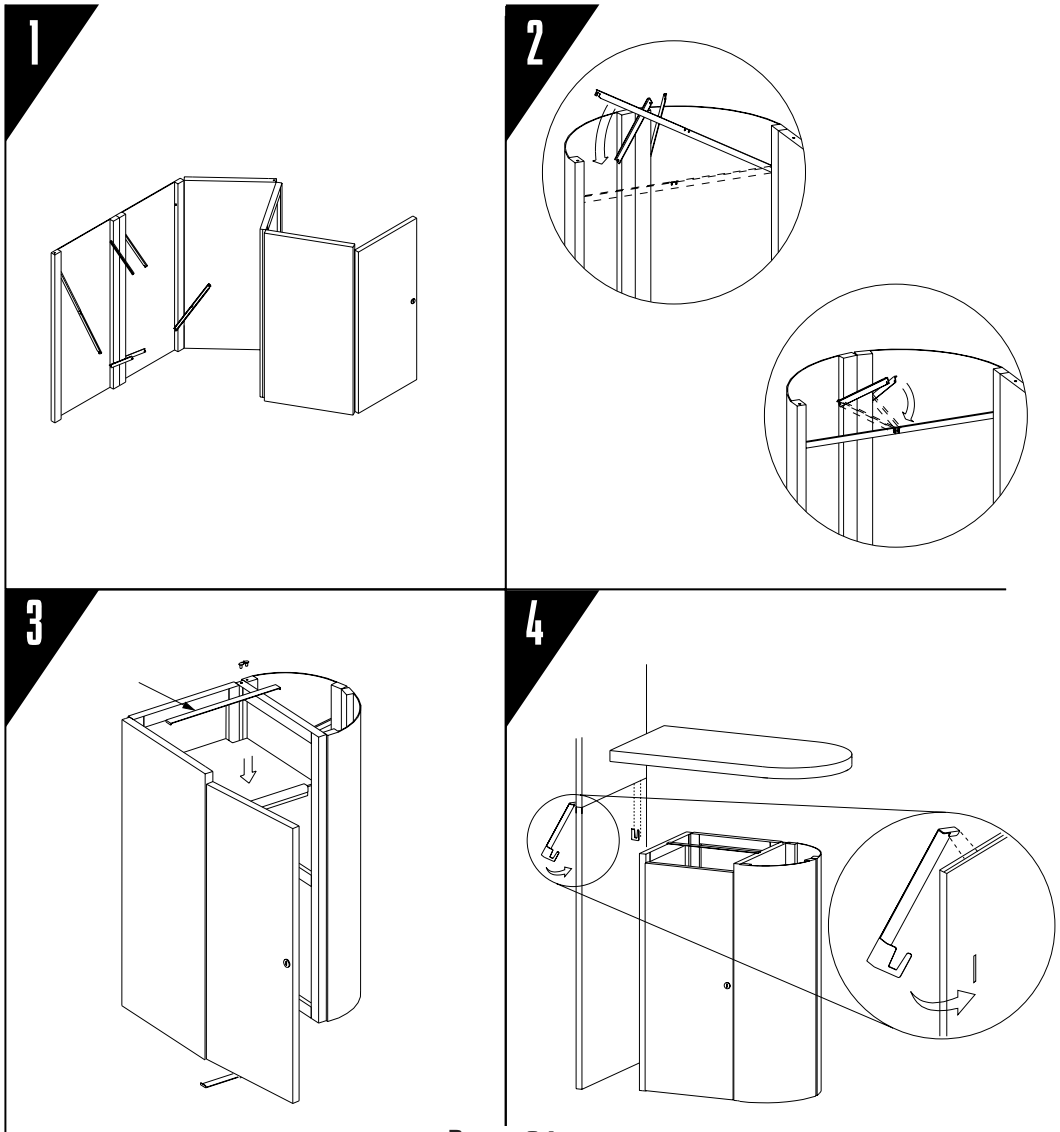

RPC2 w/ HINGED DOOR
RADIUS PENINSULA COUNTER

1. NOTE: Some units may be mirror images of this one, with the door on the other side. Unfold panels as shown.

2. Flex curved panels and latch long support rods. Short support rods fold down to fit in notches in long rods.

3. Fold panels to configuration shown. Insert a U-clip in the top and bottom to hold the end of the curved panels in place (lower clip concealed in image). Lower the internal shelf into place. Insert the upper and lower stabilizer bars. The flanges on the ends of the bars go into the grooves in the center of the panels.

4. Insert hanging brackets from the rear of the backwall and push through slots. Position countertop on base and brackets.

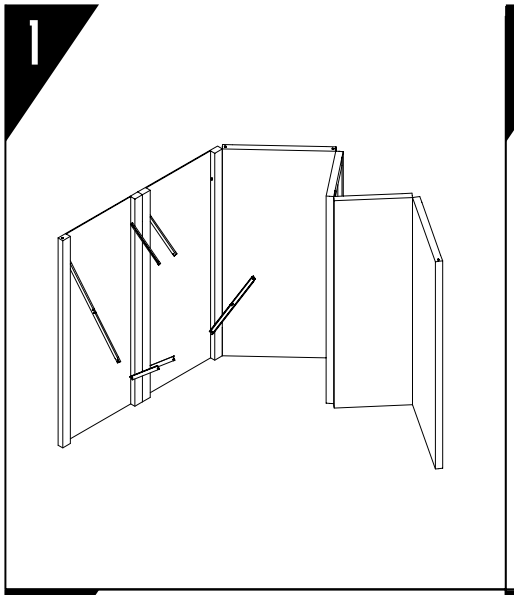

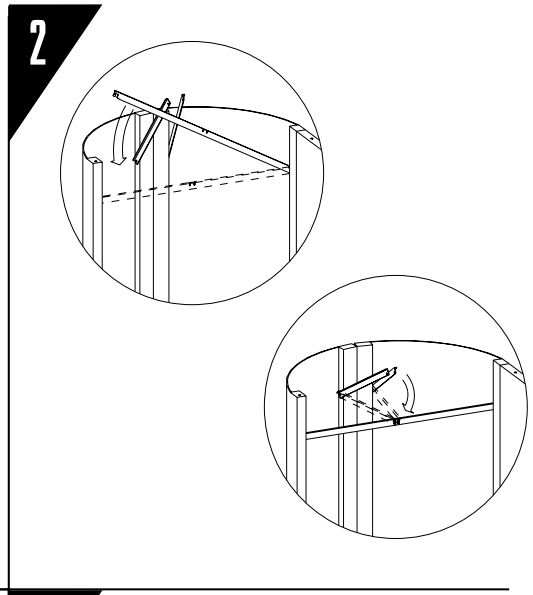

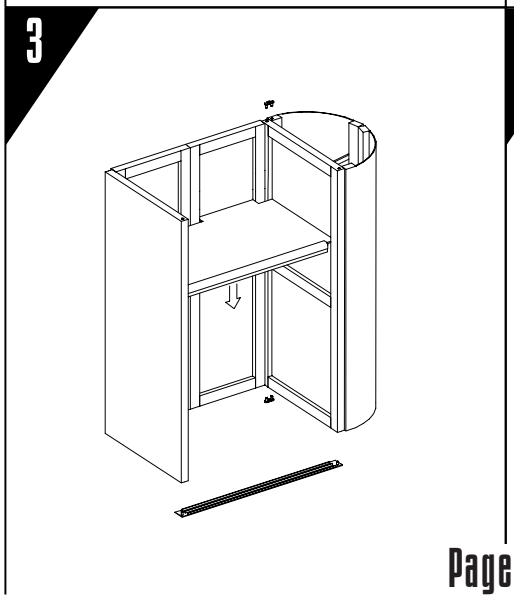

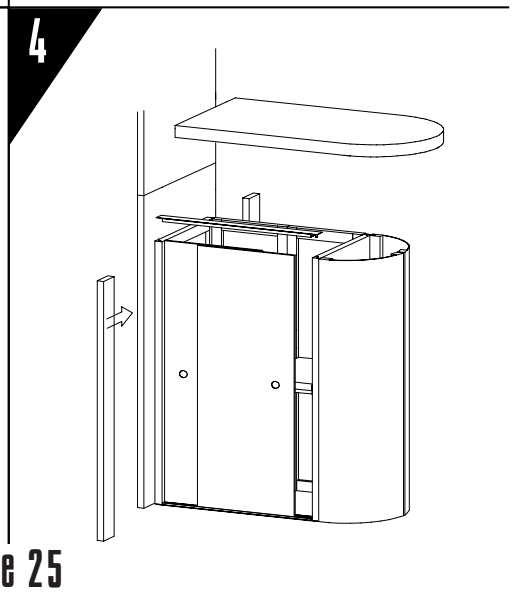

RPC3 w/ SLIDING DOORS
RADIUS PENINSULA COUNTER

1. NOTE: Some units may be mirror images of this one, with the door on the other side. Unfold panels as shown.

2. Flex curved panels and latch long support rods. Short support rods fold down to fit in notches in long rods.

3. Fold panels to configuration shown. Insert a U-clip in the top and bottom to hold the end of the curved panels in place (lower clip concealed in image). Lower the internal shelf into place. Insert the upper and lower stabilizer bars. The flanges on the ends of the bars go into the grooves in the center of the panels.

4. Place connector strips (2) between rear counter panel and backwall. Position countertop on base and brackets.

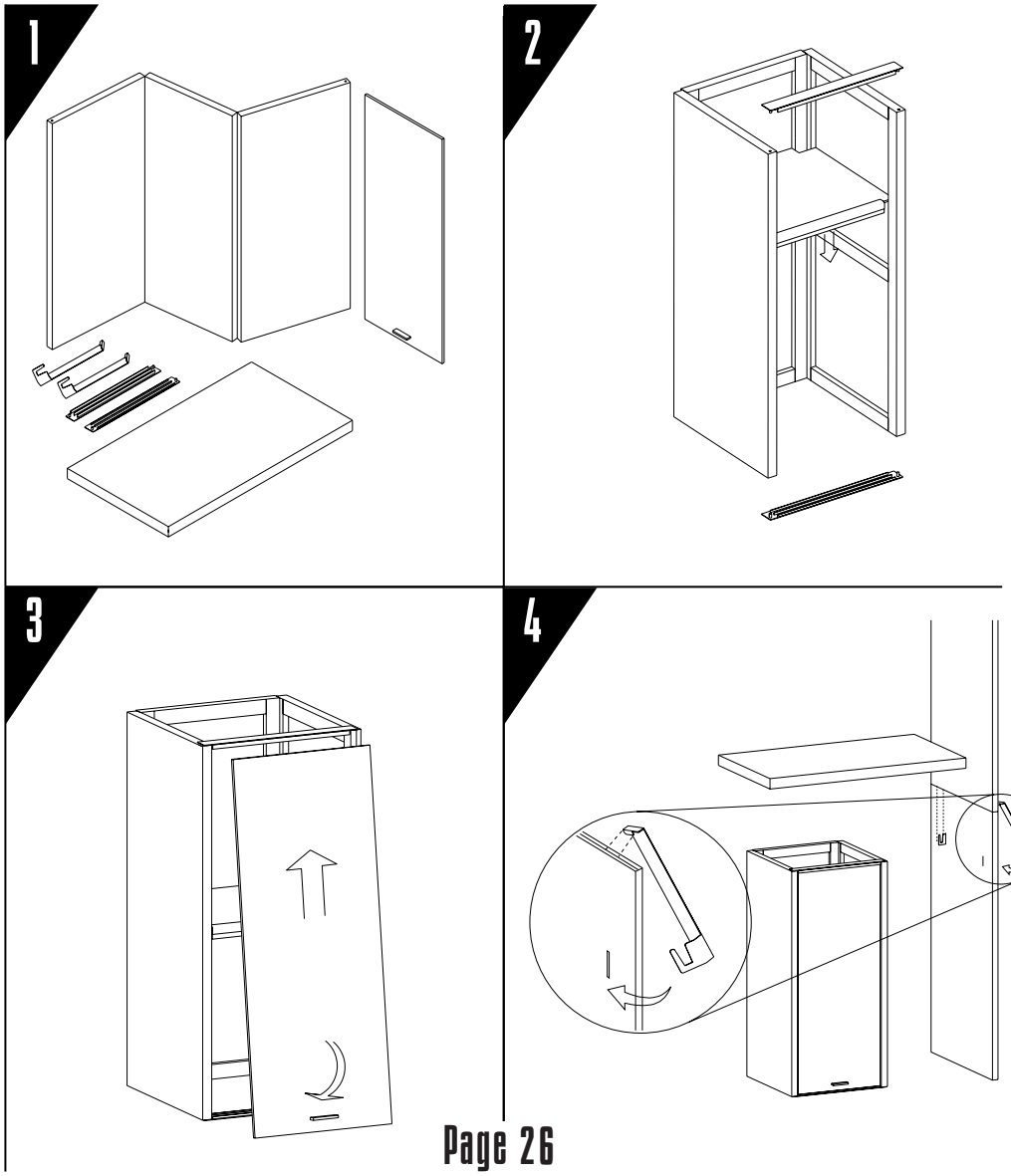

SPC w/ LIFT-OUT DOOR
SQUARE PENINSULA COUNTER

1. Unpack components.

2. Fold panels to form 3 sides of base. Insert upper and lower door tracks. Install shelf.

3. Insert lift out door.

4. Insert hanging brackets from the rear of the backwall and push through slots. Position base as shown. Rest countertop between base and brackets.

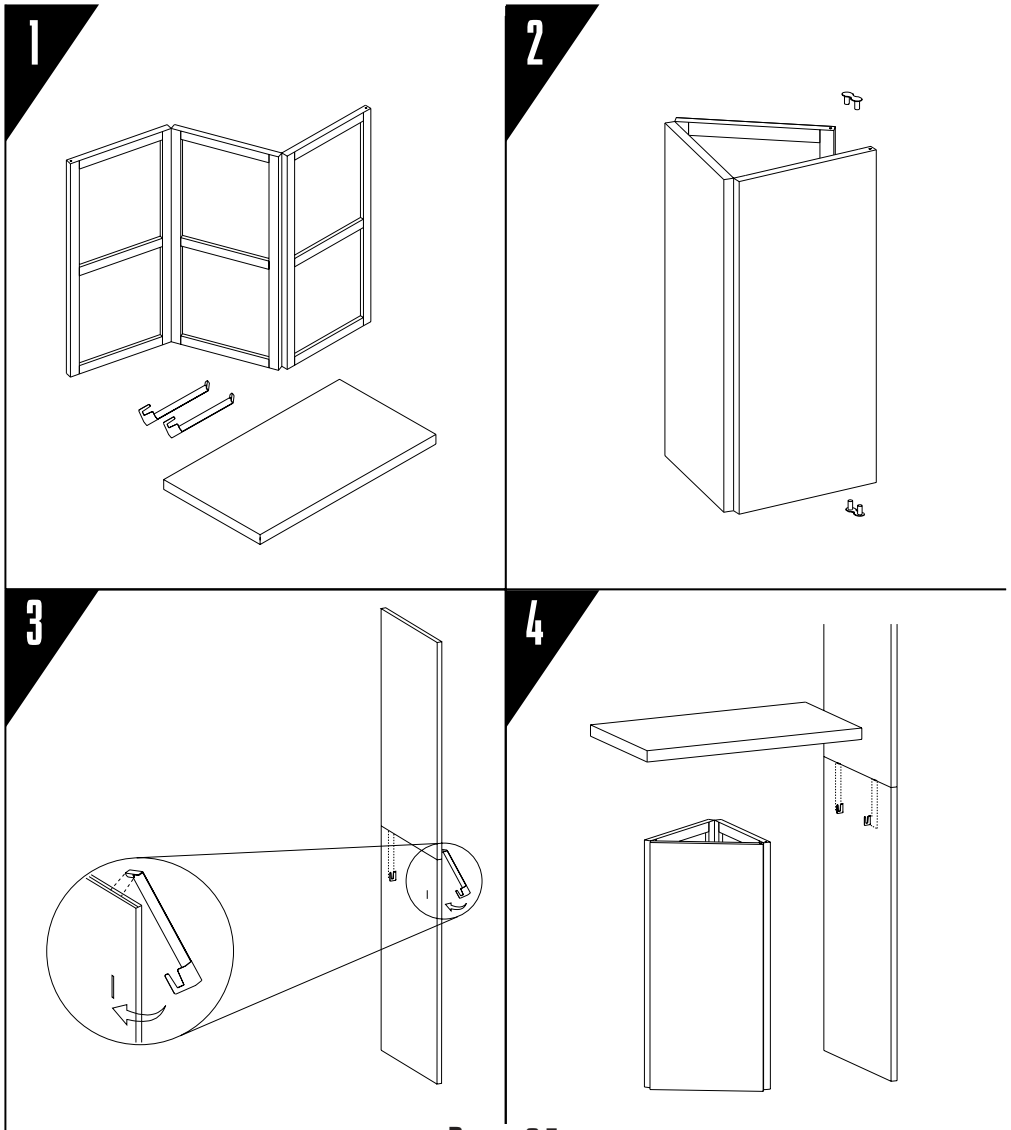

TPC
TRIANGULAR PENINSULA COUNTER

1. Unpack components.

2. Fold panels to form triangle. Fasten with U-clips at the top and bottom.

3. Insert hanging brackets from the rear of the backwall and push through slots.

4. Position base as shown. Rest countertop between base and brackets.

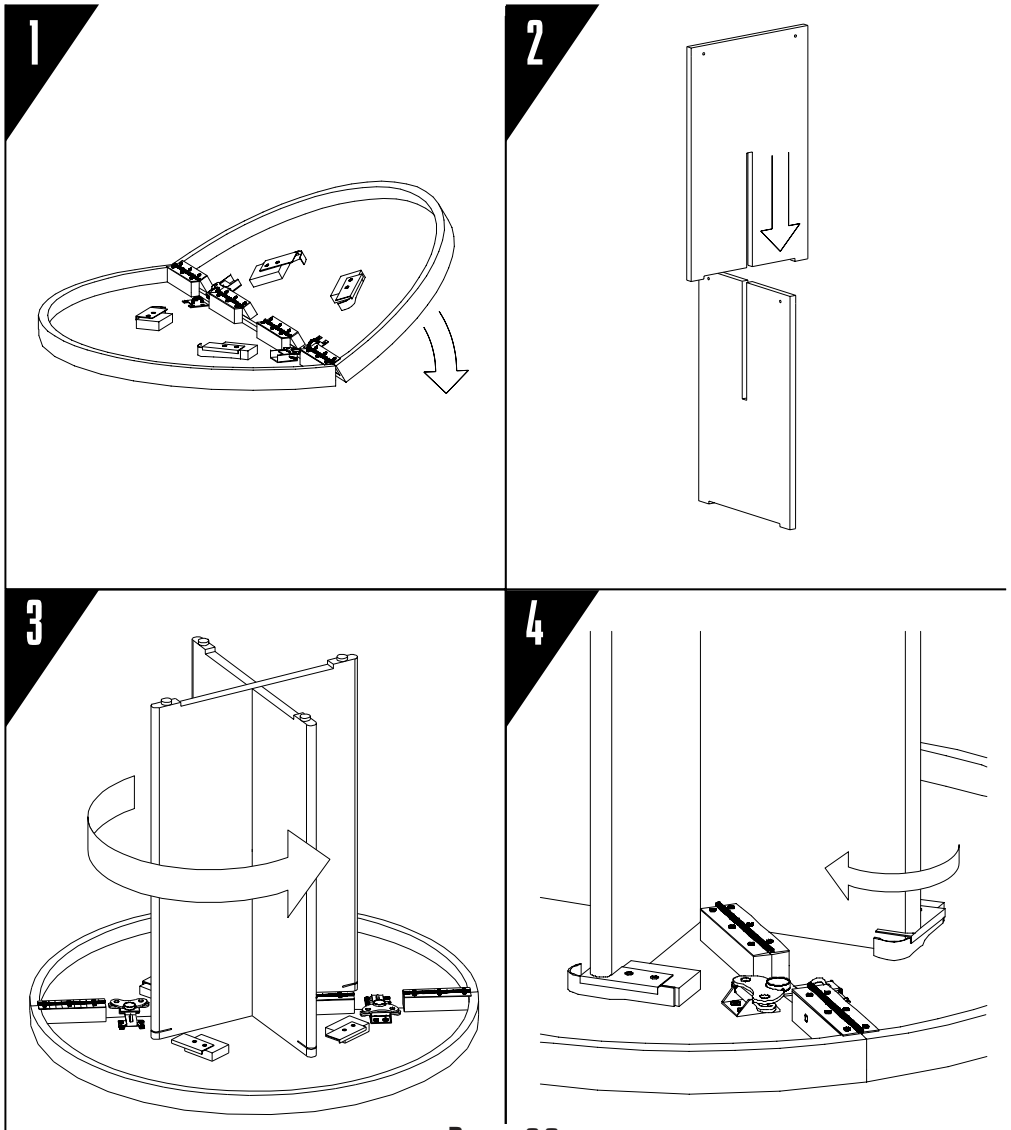

RCT
ROUND CONFERENCE TABLE

1. Rest countertop on floor and unfold. Fasten latches to secure.

2. Slide the base panels together.

3. Position base panels over countertop with plastic feet facing up. Rotate base panels so metal brackets slide into the notches in the panels.

4. Secure base panels to countertop with the attached velcro tabs. Turn table assembly upright.

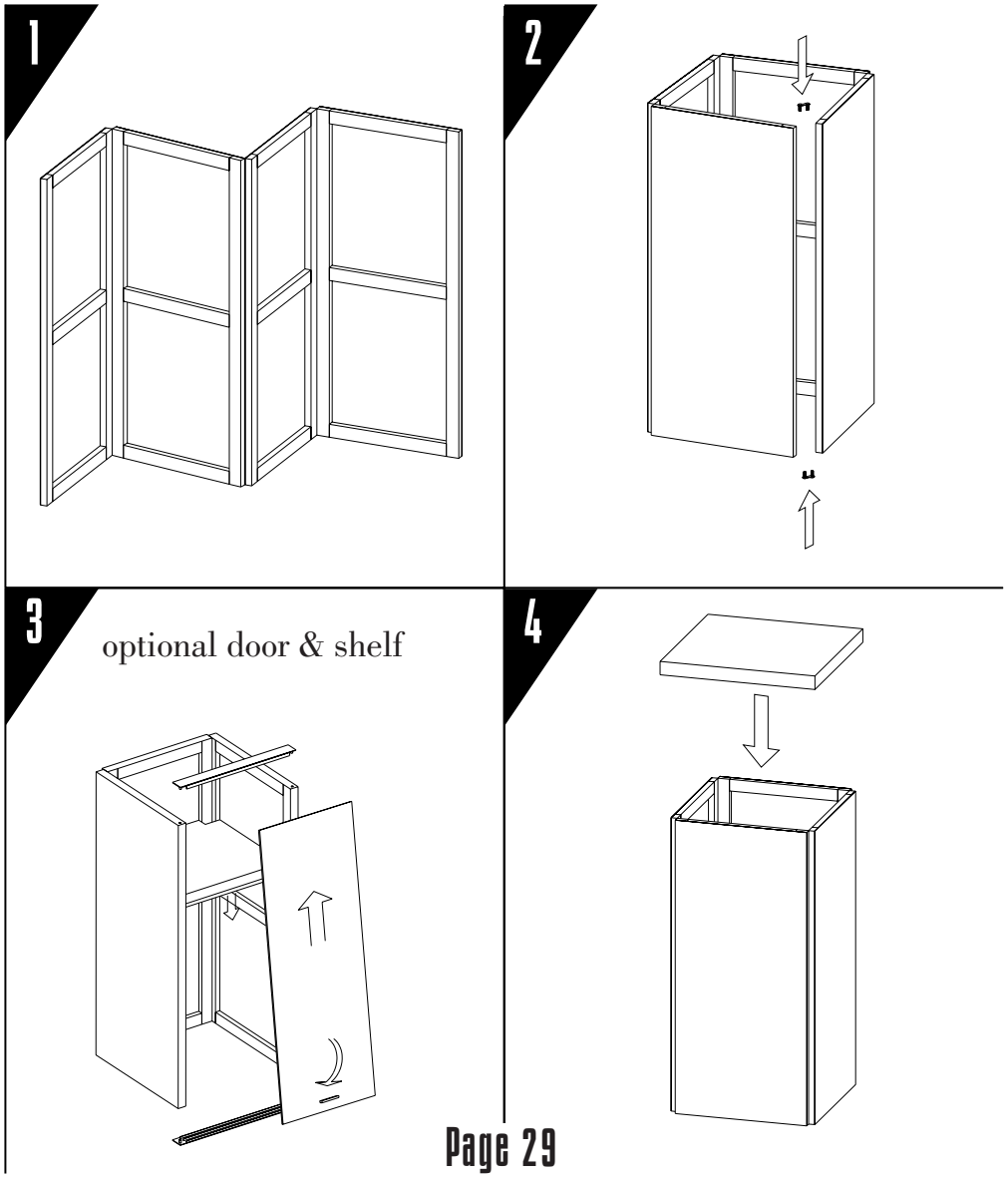

P1
SQUARE PEDESTAL

1. Unfold panel sections to form a square.

2. Connect top and bottom with U-clips.

3. Insert the optional shelf. Place the upper and lower door tracks, then insert the optional door.

4. Set top on base.

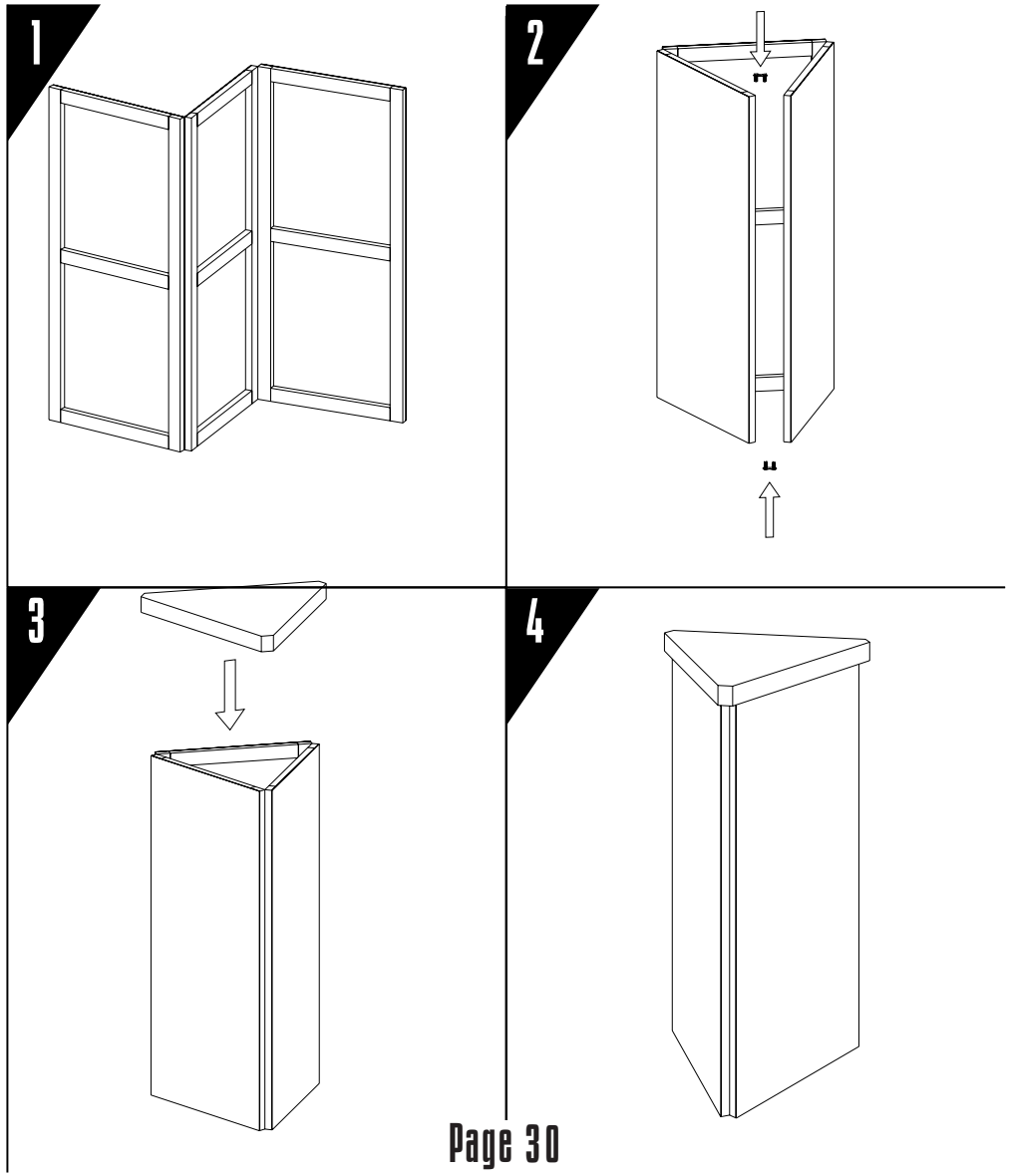

P2
TRIANGULAR PEDESTAL

1. Fold panel sections to form a triangle.
2. Connect top and bottom with U-clips.
3. Place top on base.
4. Assembled unit.

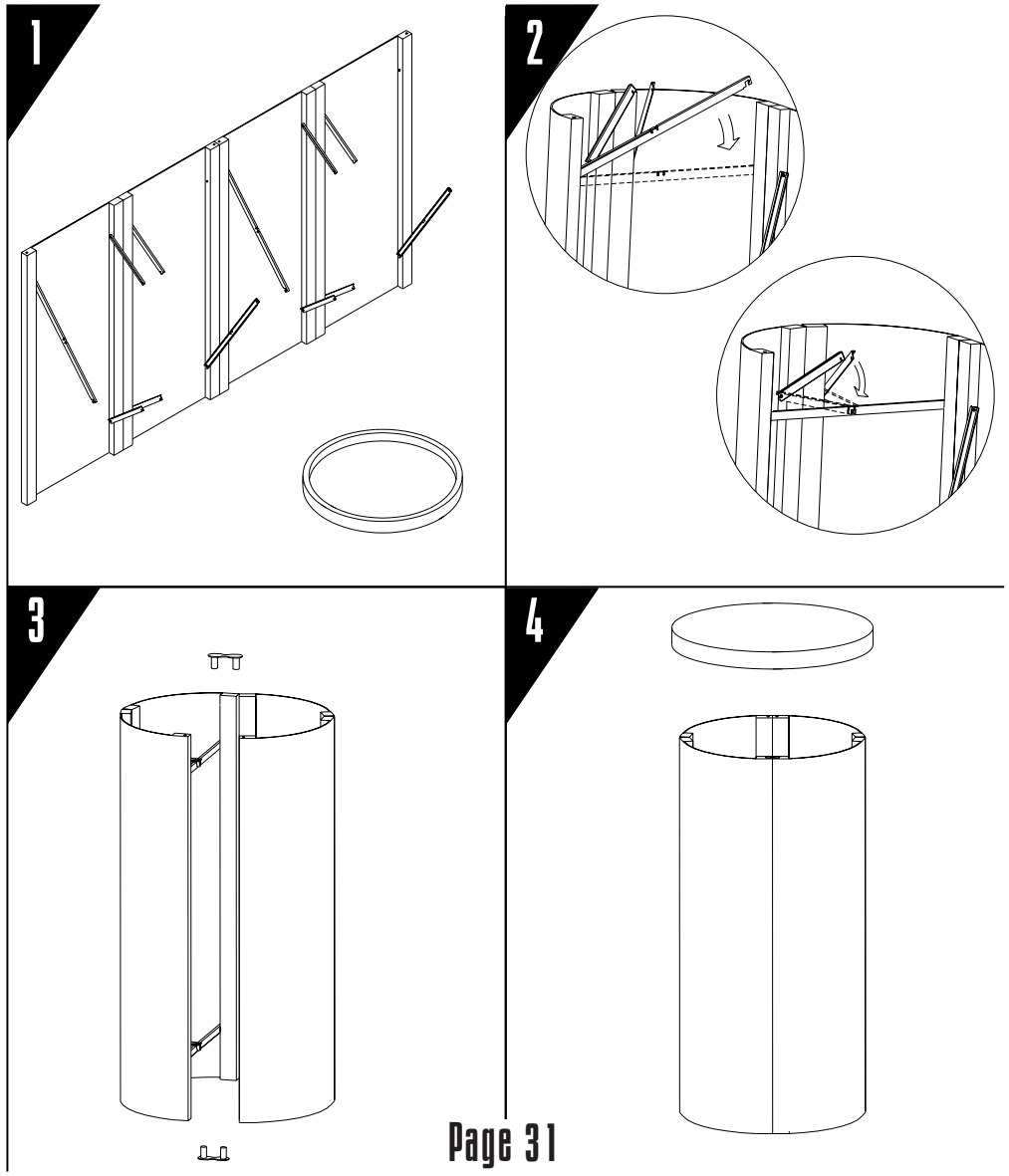

PR1/PR2
ROUND PEDESTALS

1. Unpack components.

2. Flex curved panels and latch long support rods. Short support rods fold down to fit in notches in long rods.

3. Rotate curves to close circle, and fasten with U-clips at the top and bottom.

4. Rest countertop on base.

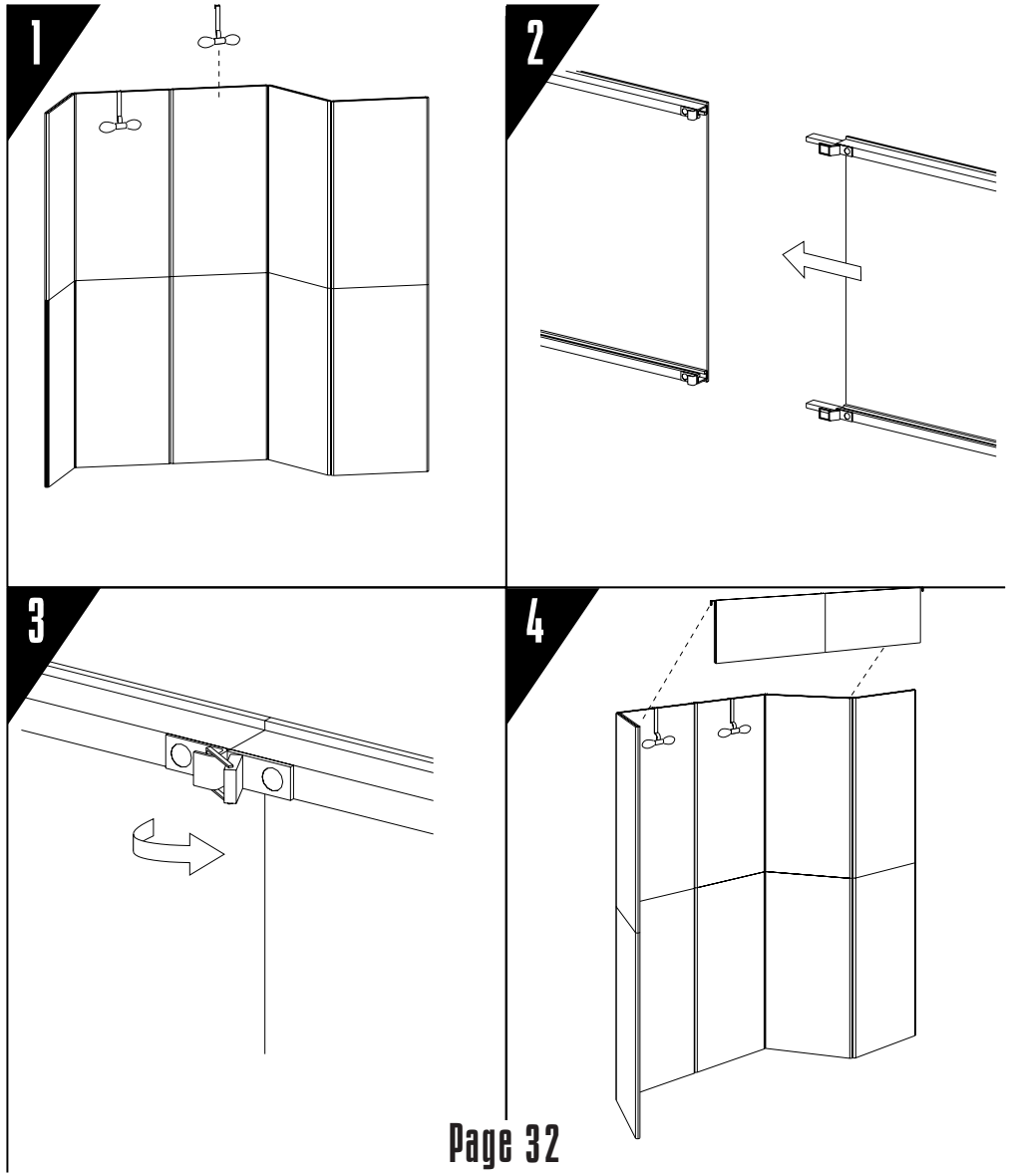

H2/3
BACKLIT HEADER

1. Hook light fixtures over top of backwall.
2. Slide header sections together.
3. Fasten latches.
4. Hang header from backwall.

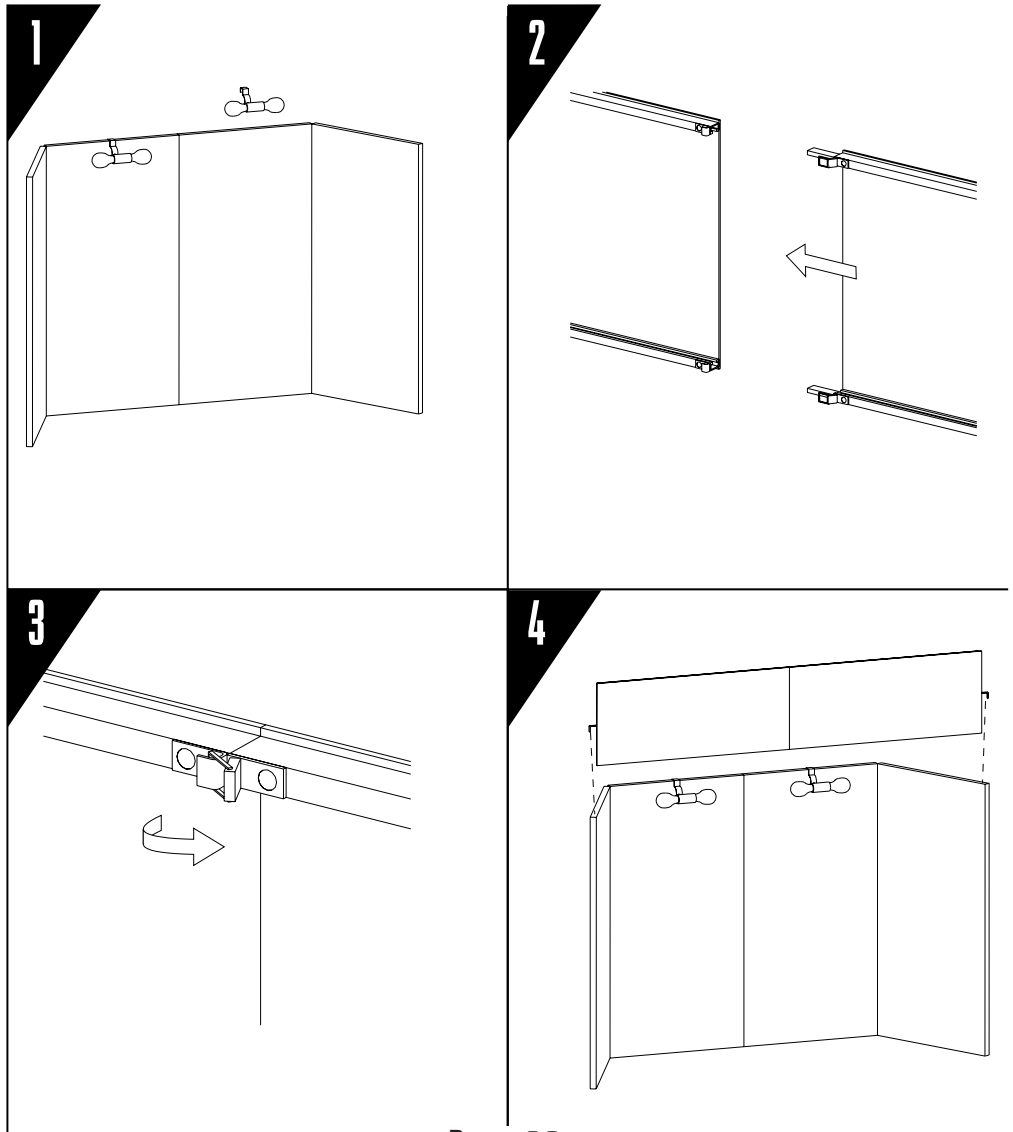

HT1/2
HEADER

1. Hook light fixtures over top of backwall.
2. Slide header sections together.
3. Fasten latches.
4. Hang header from backwall.

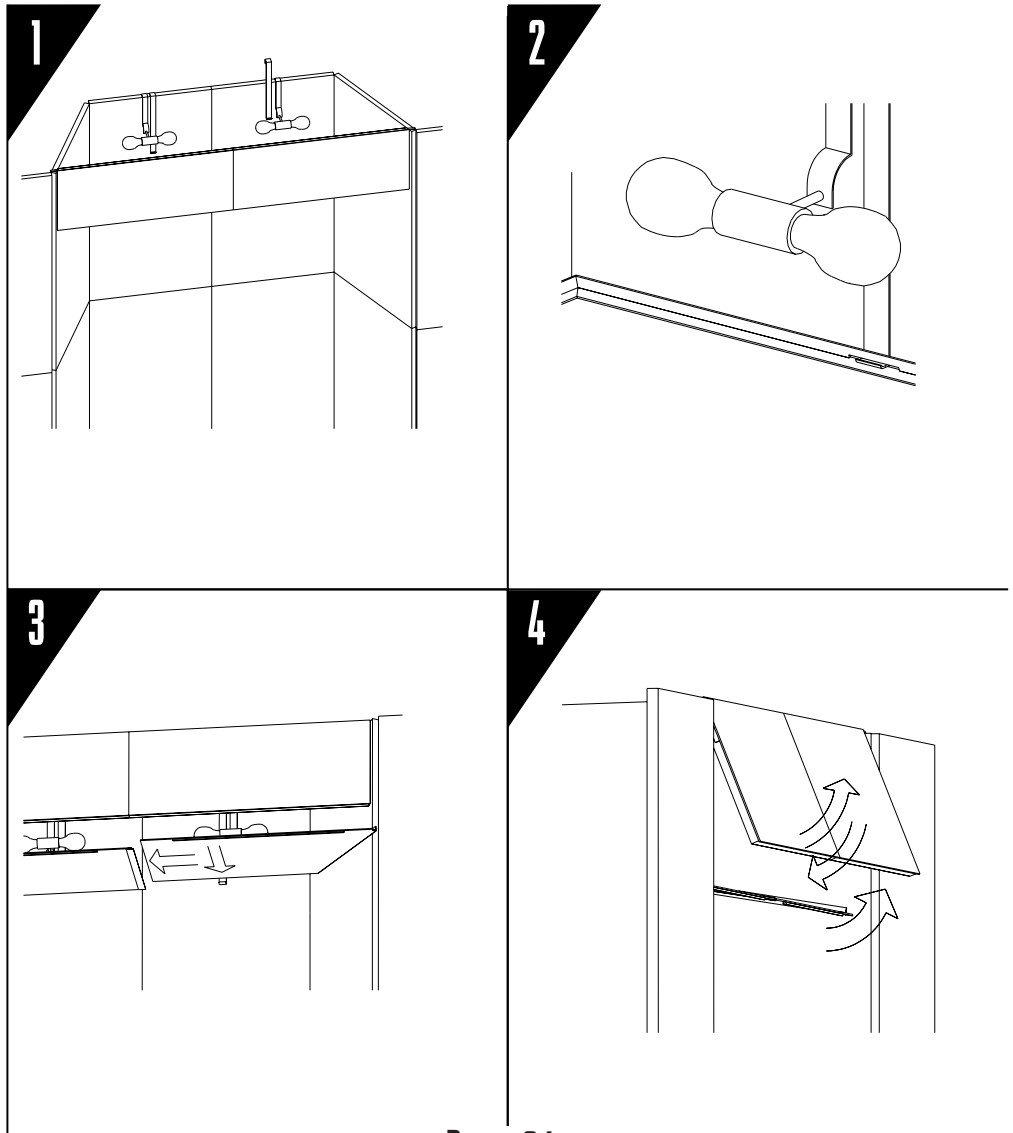

DC2P/3P DIFFUSER

1. Attach H2 or H3 header to unit. Hang a pair of diffuser brackets from the top of the backwall adjacent to the light fixture brackets.

2. Hang the left half of the diffuser from the left diffuser bracket. There is a slot in the diffuser's rear extrusion to accept the bracket.

3. Hang the right half of the diffuser from the right bracket, and insert edge into the "H" moulding which is glued to the left half.

4. Swing header forward slightly, and raise diffuser. Lower diffuser so plastic strip on bottom of front edge fits inside the channel on the bottom of the header.

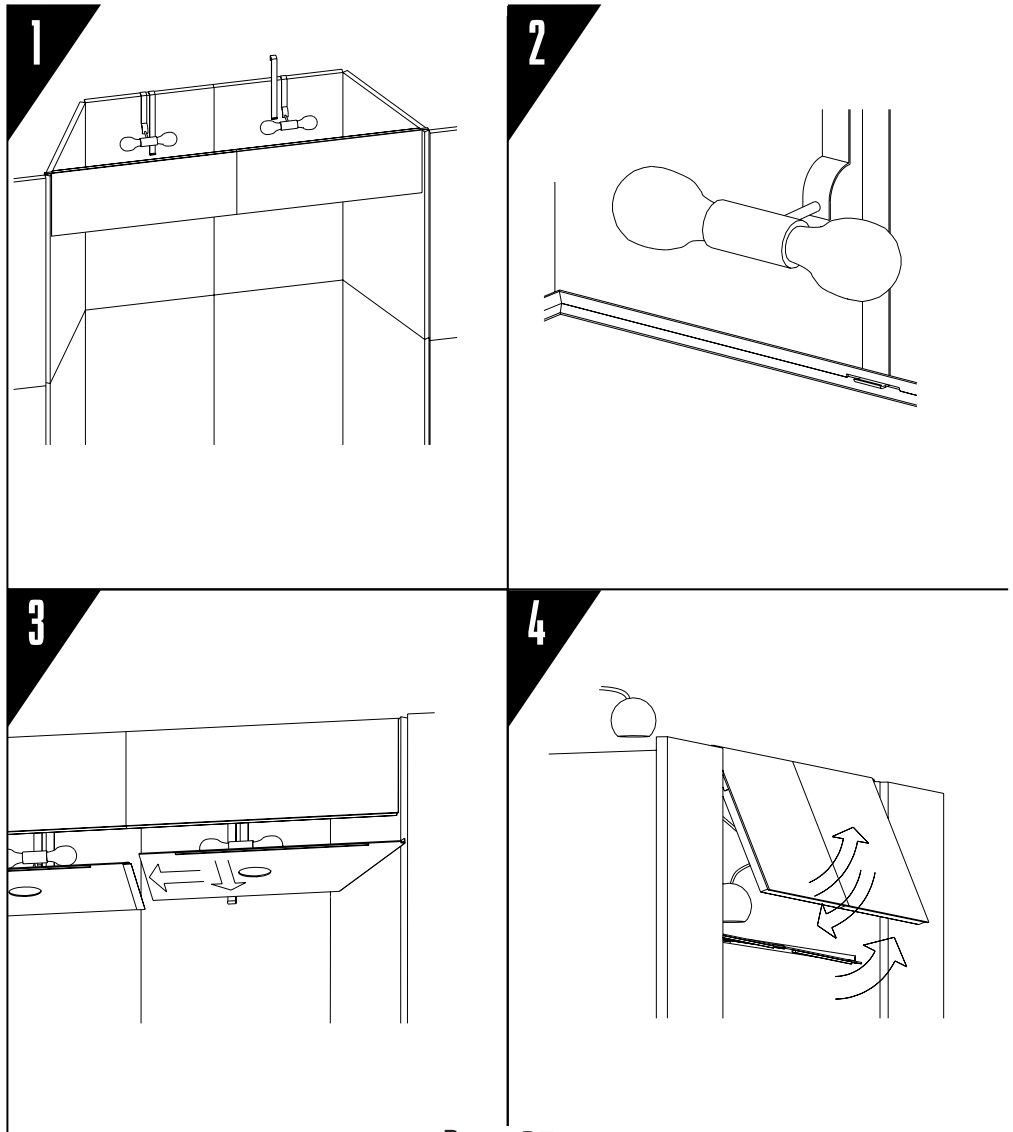

DC2L/F & DC3L/F
DIFFUSER w/ BALL LIGHTS

1. Attach H2 or H3 header to unit. Hang a pair of diffuser brackets from the top of the backwall adjacent to the light fixture brackets.

2. Hang the left half of the diffuser from the left diffuser bracket. There is a slot in the diffuser's rear extrusion to accept the bracket.

3. Hang the right half of the diffuser from the right bracket, and insert edge into the H moulding which is glued to the left half.

4. Swing header forward slightly, and raise diffuser. Lower diffuser so plastic strip on bottom of front edge fits inside the channel on the bottom of the header. Position ball lights over holes in diffuser.

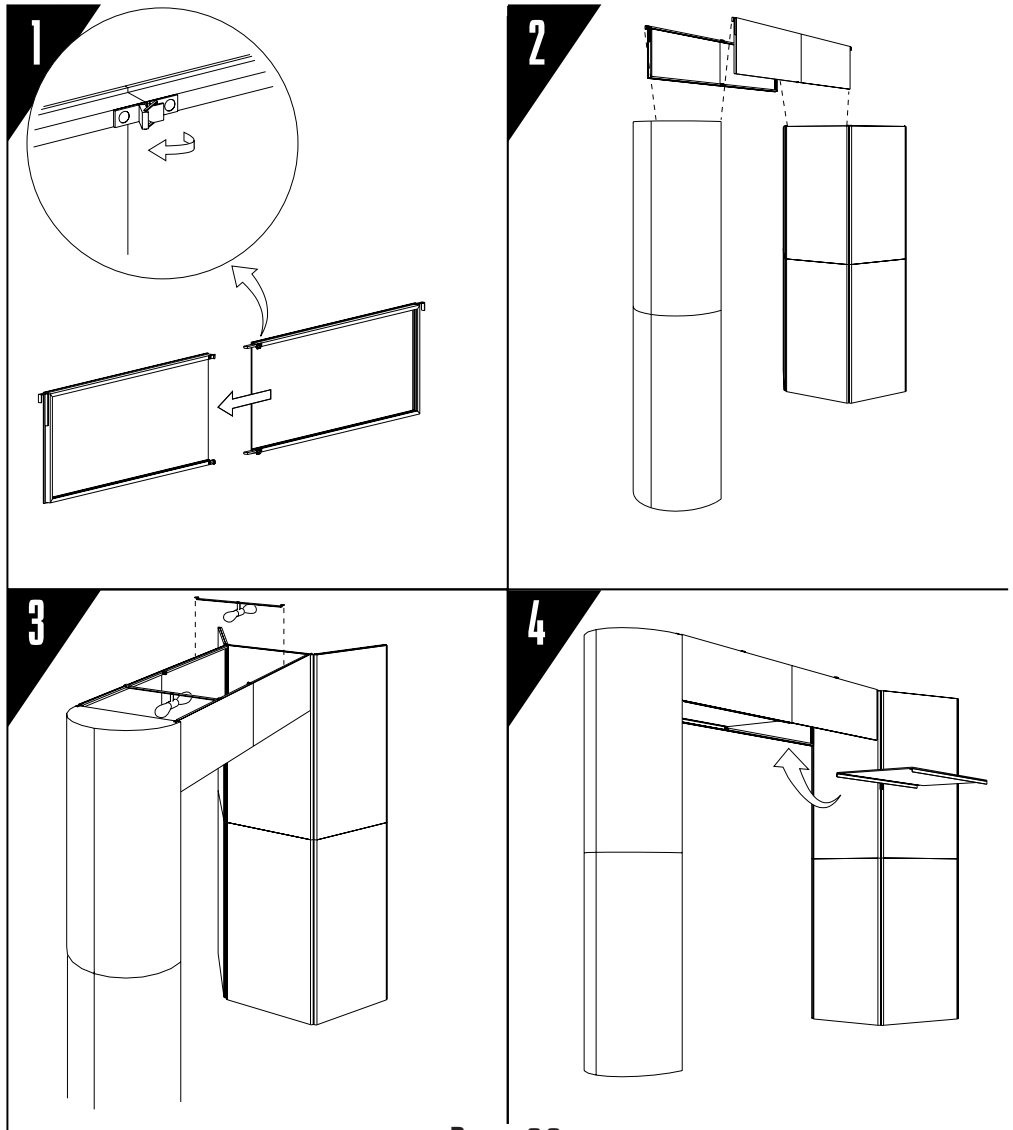

BH2/3
BRIDGE HEADER

1. Slide together the side sections of the headers, and fasten the latches.

2. Hang headers between backwall and tower.

3. Attach lights. Pegs on light brackets fit into holes in top of headers.

4. Insert diffusers so plastic strip on bottom of diffusers' edges fit inside the channels on the bottoms of the headers.

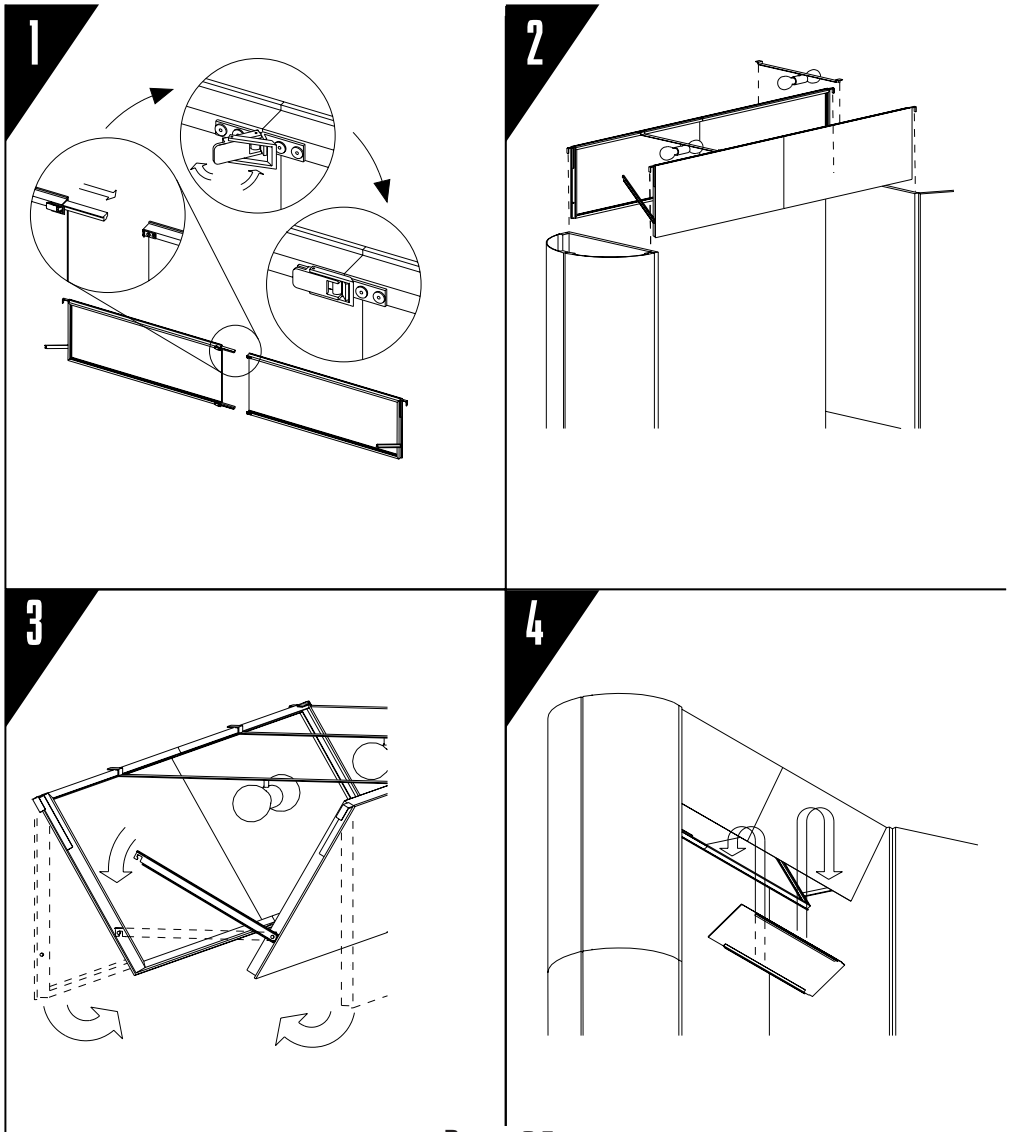

BH2/3
ANGLED BRIDGE HEADER

1. Slide together the side sections of the headers, and fasten the latches.

2. Hang header sides between walls. Attach light fixtures. Be sure tabs on fixtures engage with holes on top of header frames.

3. Rotate header sides to angled position and hook support bars onto screws to lock in place.

4. Install diffusers. The aluminum angles face down and fit in the channels on the bottom of the header sides. Tilt diffusers so they will fit through the opening, raise, and let drop into place.

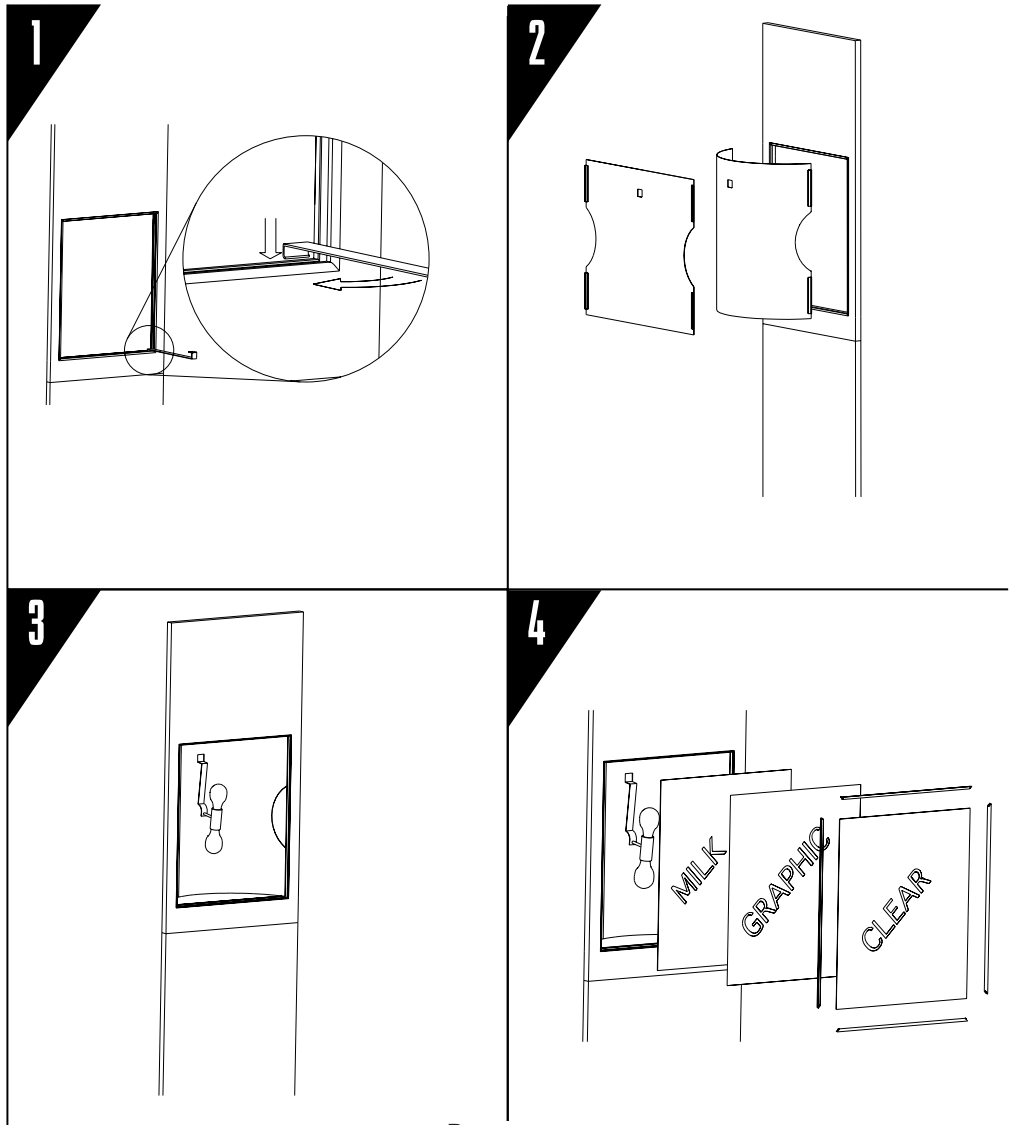

LBL/LBU
LIGHTBOX

1. Remove trim strips around the front edges of the window. Once one side of the strip is loose, the rest comes off easily.
A prying tool may be needed. A diffuser bracket is handy for this purpose.

2. Flex reflector panel and insert into the back of the window.

3. Hang light fixture from hole in reflector panel.

4. Insert the graphics into the window, sandwiched by a milk panel in the back, and a transparent panel in the front. Replace trim strips. When disassembling unit, first remove the reflector, and then the trim strips in the back. This way you will not scratch the transparent panel with your prying tool.

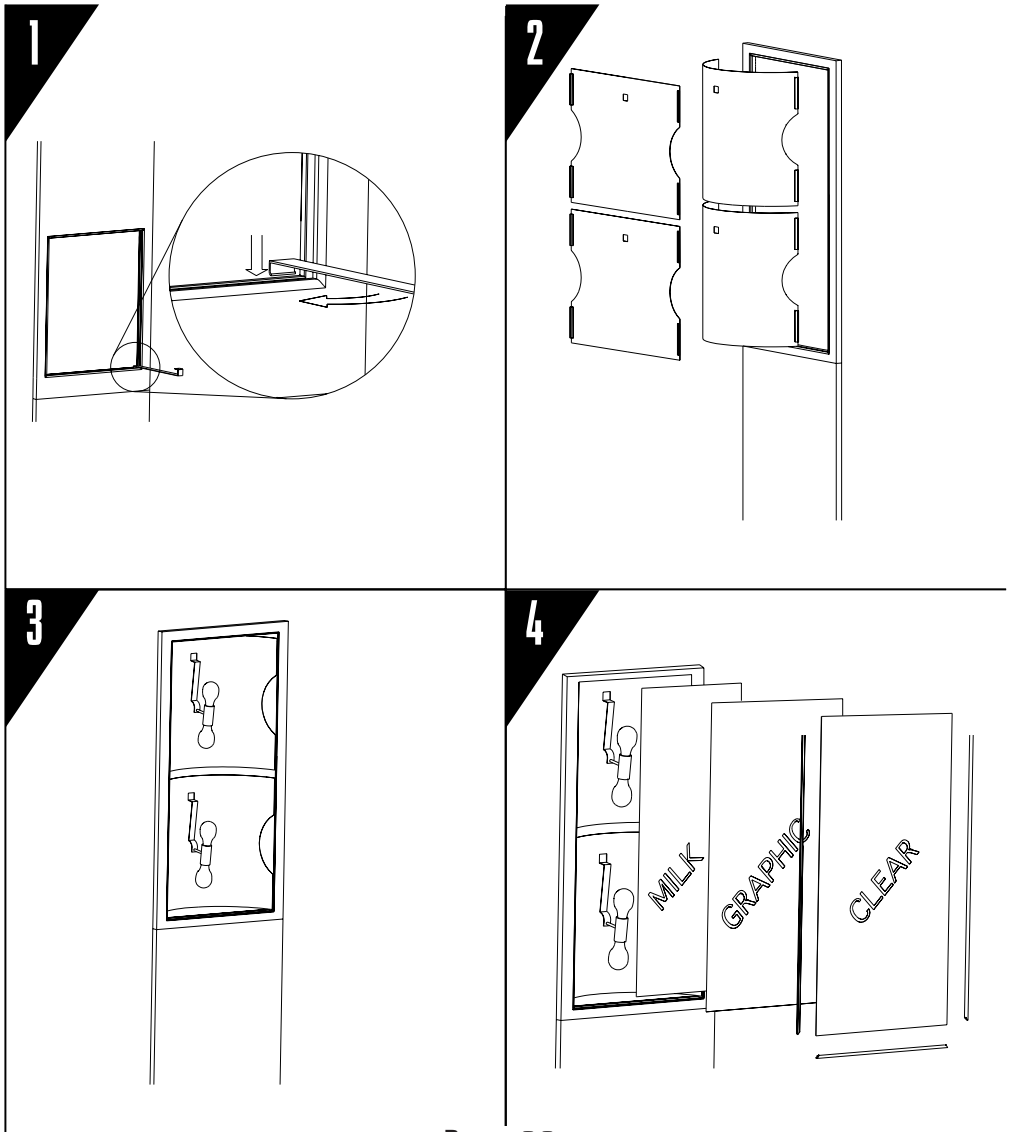

LBF
LIGHTBOX

1. Remove trim strips around the front edges of the window. Once one side of the strip is loose, the rest comes off easily. A prying tool may be needed. A diffuser bracket is handy for this purpose.

2. Flex reflector panels and insert into the back of the window.

3. Hang light fixtures from holes in reflector panels.

4. Insert the graphics into the window, sandwiched by a milk panel in the back, and a transparent panel in the front. Replace trim strips. When disassembling unit, first remove the reflector, and then the trim strips in the back. This way you will not scratch the transparent panel with your prying tool.

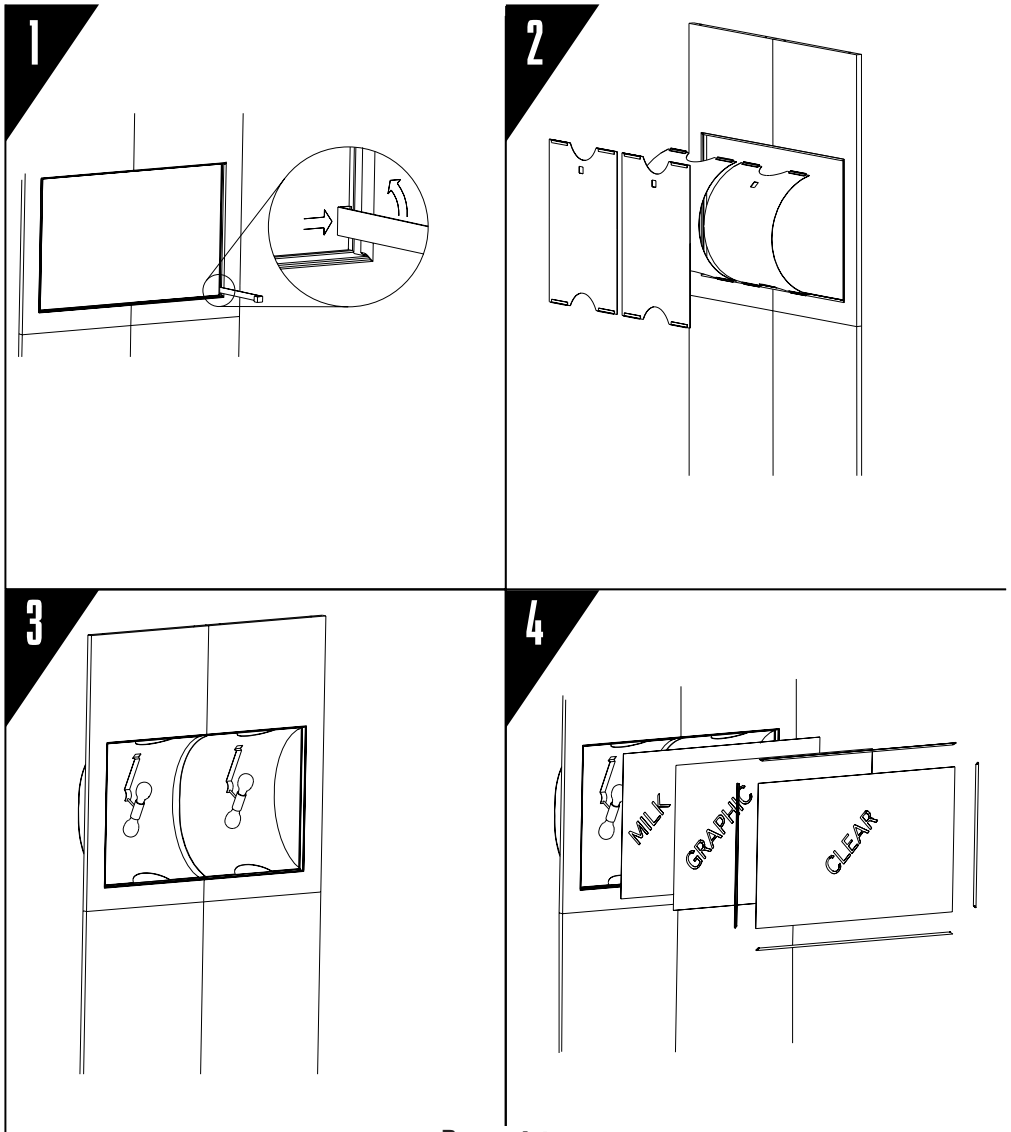

DOUBLE PANEL LIGHTBOX (30"x40" MAX)

1. Remove right and left trim strips on the front edges of the window. Once one side of the strip is loose, the rest comes off easily. A prying tool may be needed. A diffuser bracket is handy for this purpose.

2. Flex reflector panel, and insert into the back of the window.

3. Hang light fixtures from holes in reflector panels.

4. Insert the graphics into the window, sandwiched by a milk panel in the back, and a transparent panel in the front. Replace trim strips. When disassembling unit, first remove the reflector, and then the trim strips in the back. This way you will not scratch the transparent panel with your prying tool.

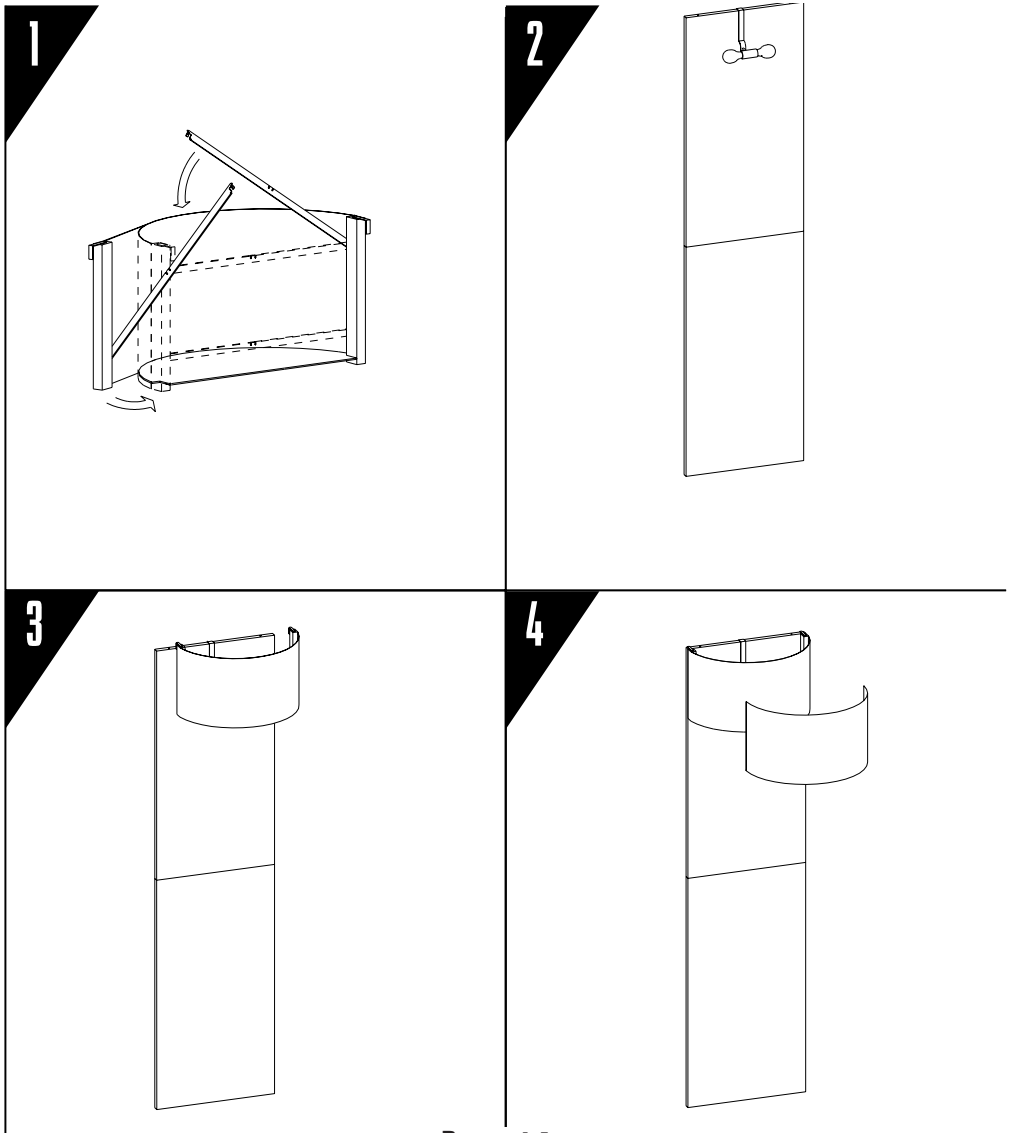

RSC1
BACKLIT RADIUS SCONCE

1. Wrap sconce panel around diffuser and latch support bars. Diffuser should be held tightly in place.

2. Hang light fixture from backwall section where sconce will be installed. Drape power cord over back of unit and plug into extension cord or power strip.

3. Hang sconce from backwall.

4. Attach graphic with velcro.

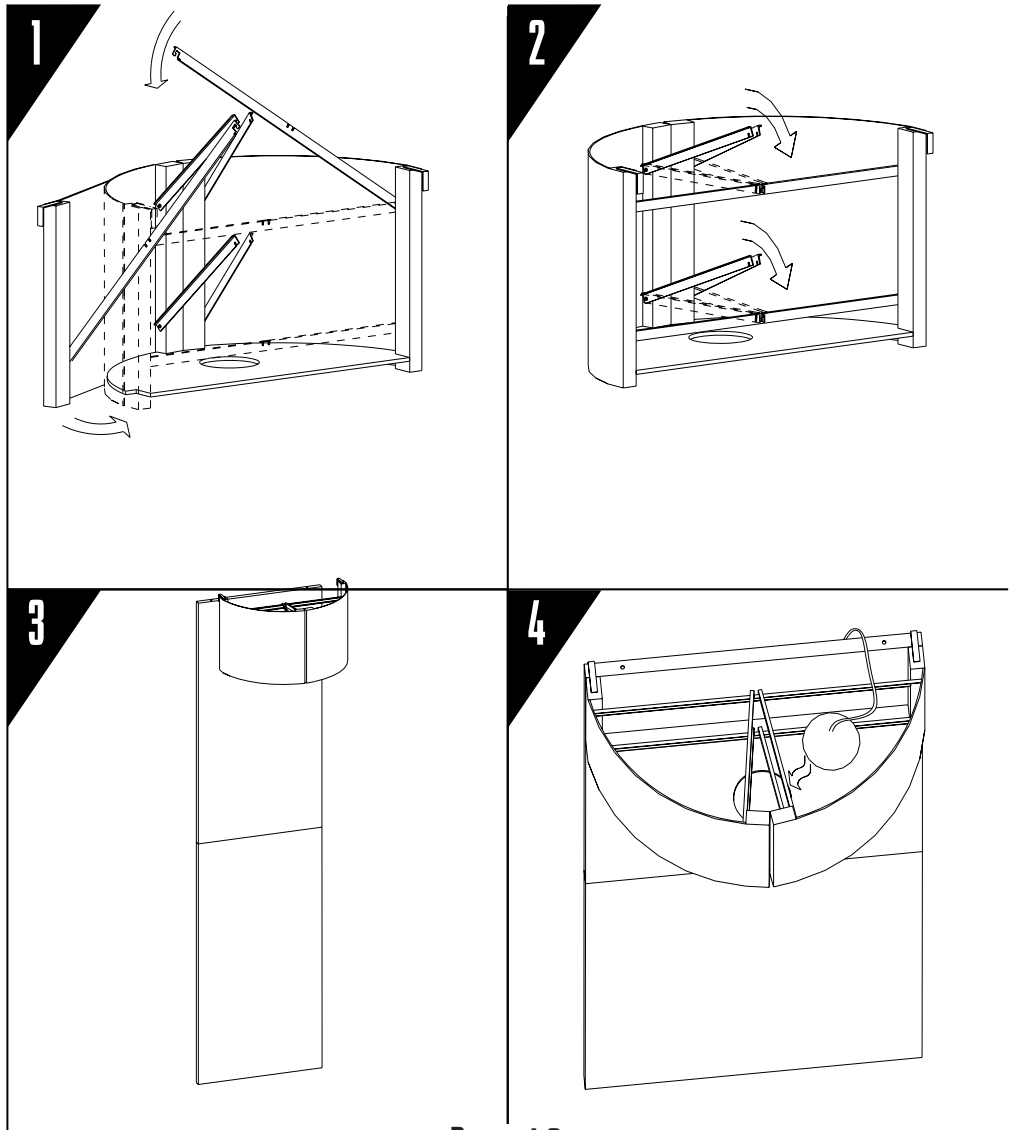

RSC2

RADIUS SCONCE W/ BALL LIGHT

1. Wrap sconce panel around diffuser and latch large support bars. Diffuser should be held tightly in place.

2. Swing small support bars down and latch to large support bars

3. Hang sconce from backwall

4. Position ball light over hole in diffuser. Drape cord over back of panel.

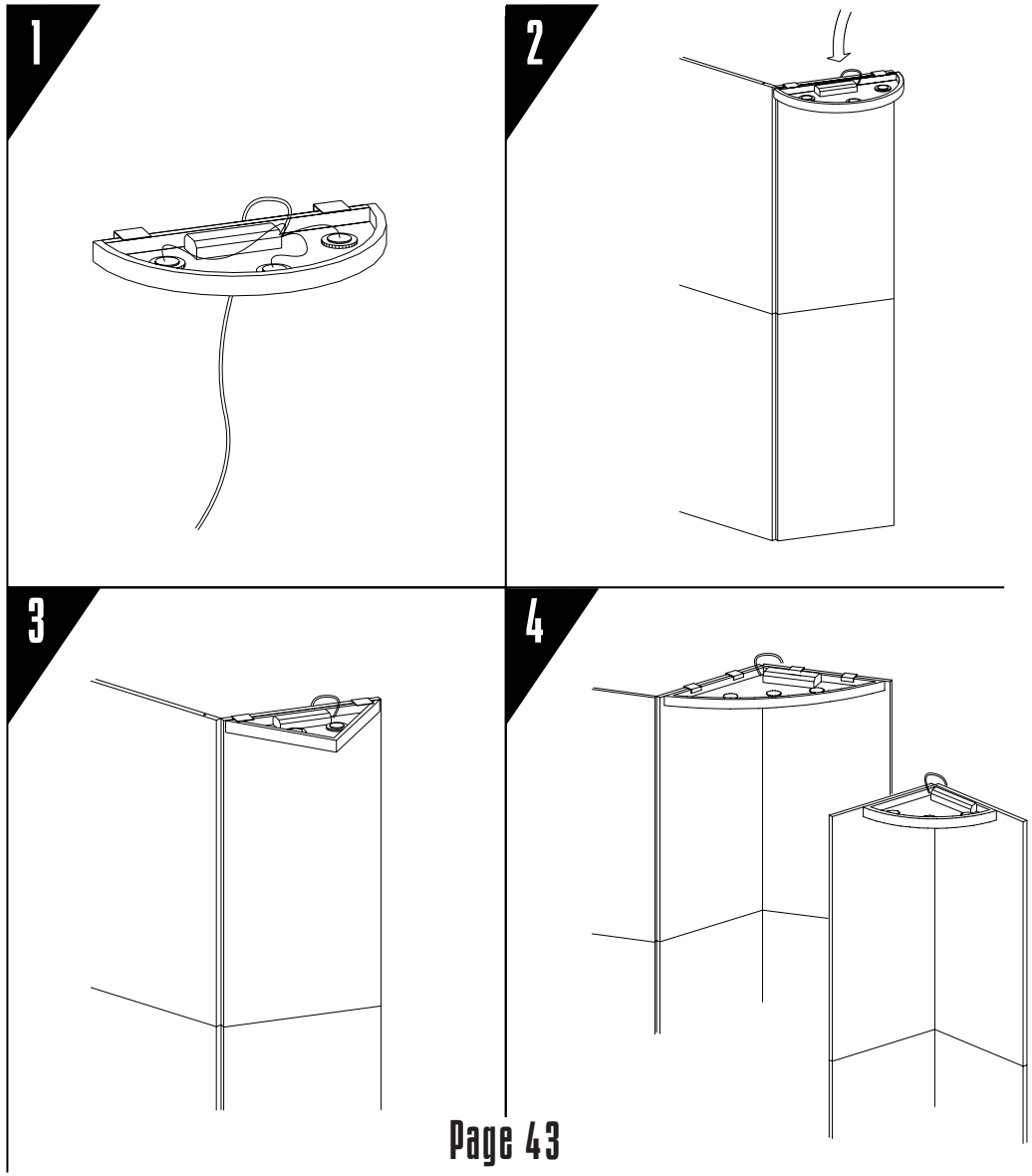

RSL
LAMINATE SCONCE

1. Hold sconce with lights facing down and brackets to the back. Unroll power cord.

2. Hang sconce on top edge of backwall panel. Drape power cord over back of unit and plug into extension cord or power strip.

3. Steps 1 and 2 are the same for the triangle sconce.

4. Steps 1 and 2 are the same for the quarter round and the 120° sconces.

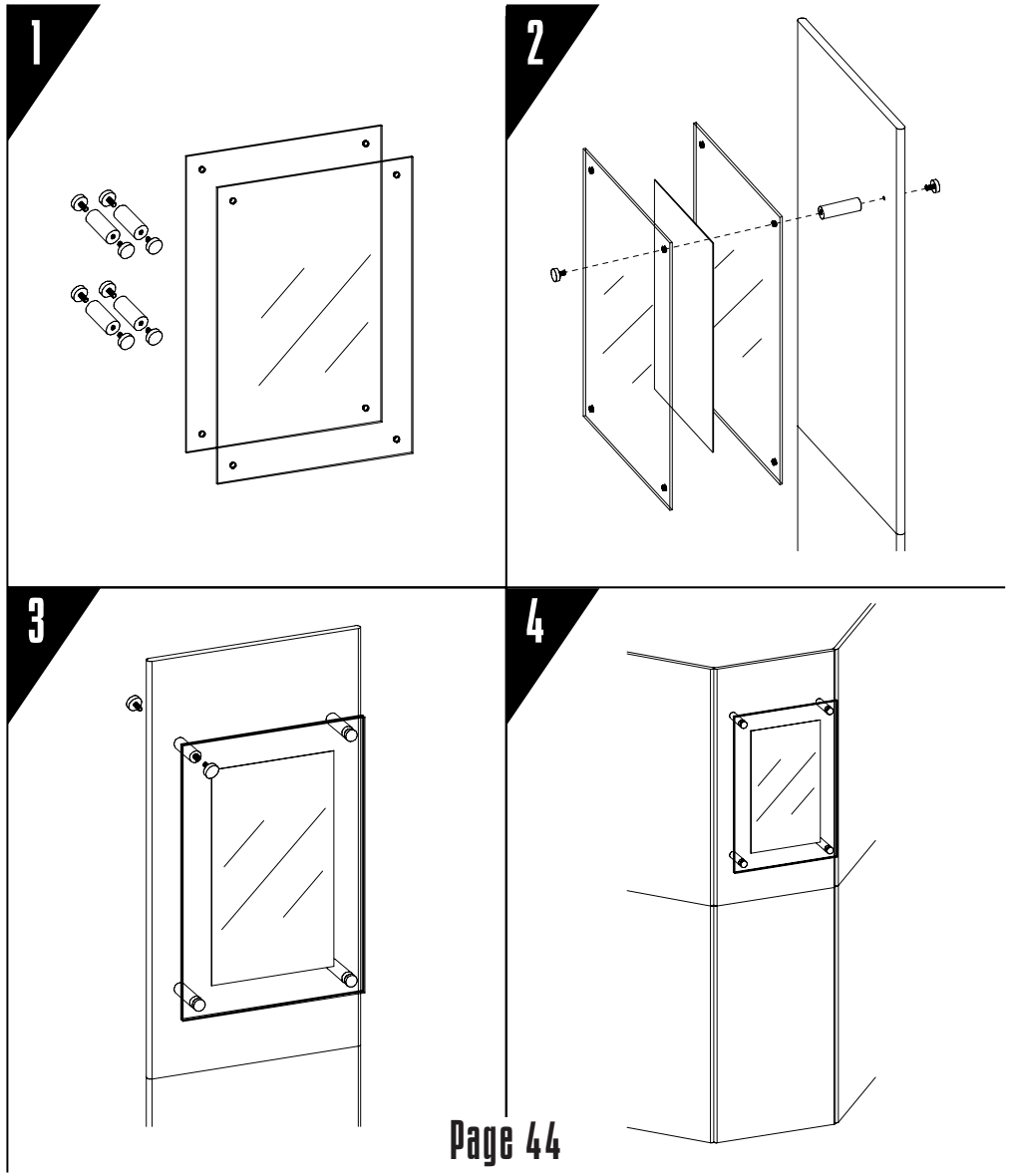

PLEX STANDOFFS

1. Unpack standoffs and plex. Before assembling, center graphic on frosted plex and attach with double-sided tape (not included).

2. Push a threaded cap through the hole in backwall panel, then connect standoff and plex to backwall in the following order: standoff, frosted plex with graphic, clear plex, threaded cap.

3. Repeat assembly for other standoffs. Finger-tighten only, as too much pressure will crack the plex.

4. Assembled unit.

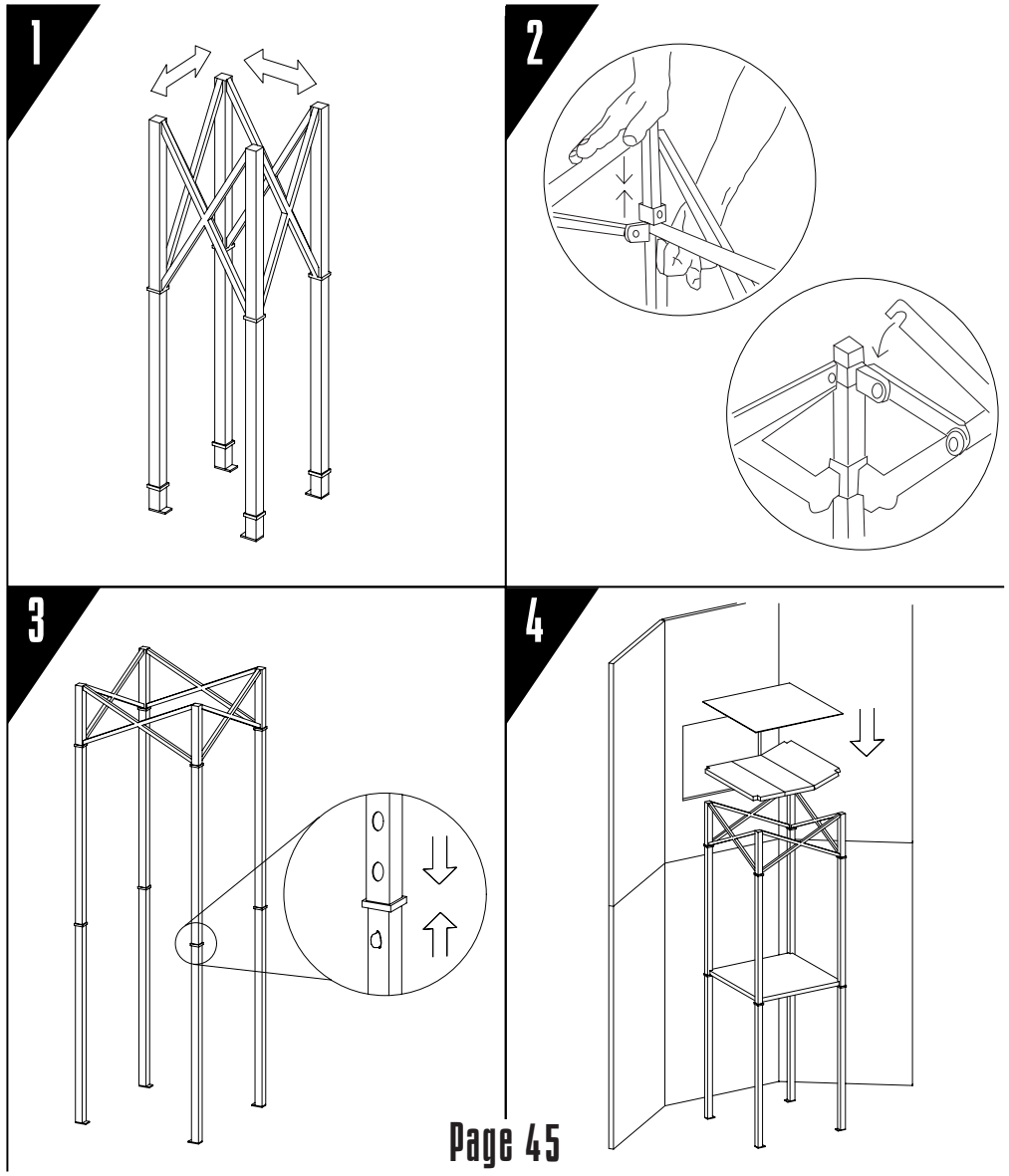

MSTD
MONITOR STAND

1. Expand monitor stand approx. 15” to 18” by pulling on any two adjacent legs.

2. Hold down a single leg while lifting truss with other hand until snap button locks into place. Lock each upper support arm onto plastic receivers by pushing down.

3. Adjust monitor stand to desired height by lifting leg and pulling out the inner leg until snap button locks. Repeat for other legs.

4. Unfold the top and place cutout areas over legs and press into place. Place the non-skid pad to prevent monitor from sliding. Position unit behind monitor cutout in backwall.

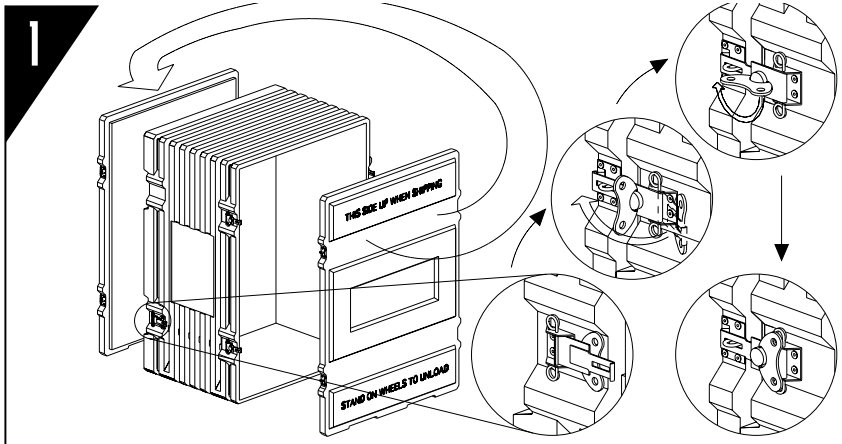

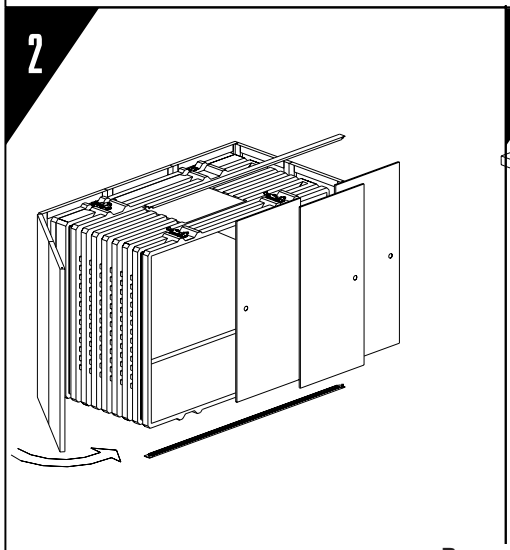

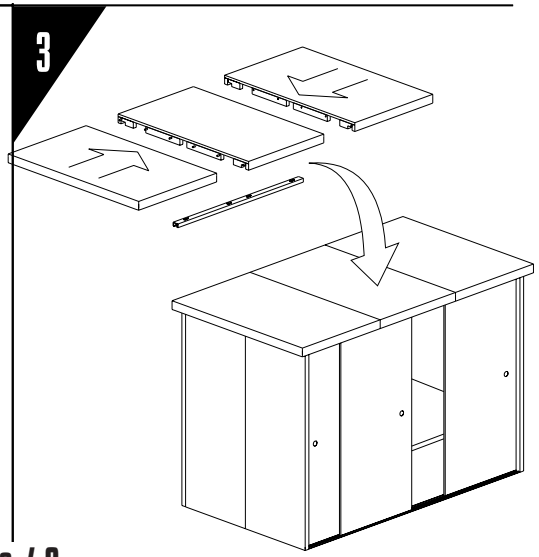

TUB CONVERSION

1. Remove front cover of tub, and put it on the back. Fasten latches to secure.

2. Rotate tub to rest on it's side. Unfold the 7 panel base, and wrap around 3 sides of tub. Insert lower and upper door track.

3. Slide together the 3 sections of the countertop. Fasten the 4 latches on the underside (these are similar to the latches on the tub). Slide the support bar into place. It has 4 keyholes that fit over the heads of bolts in the bottom of the counter sections. Rest the countertop on the base. Position the doors.

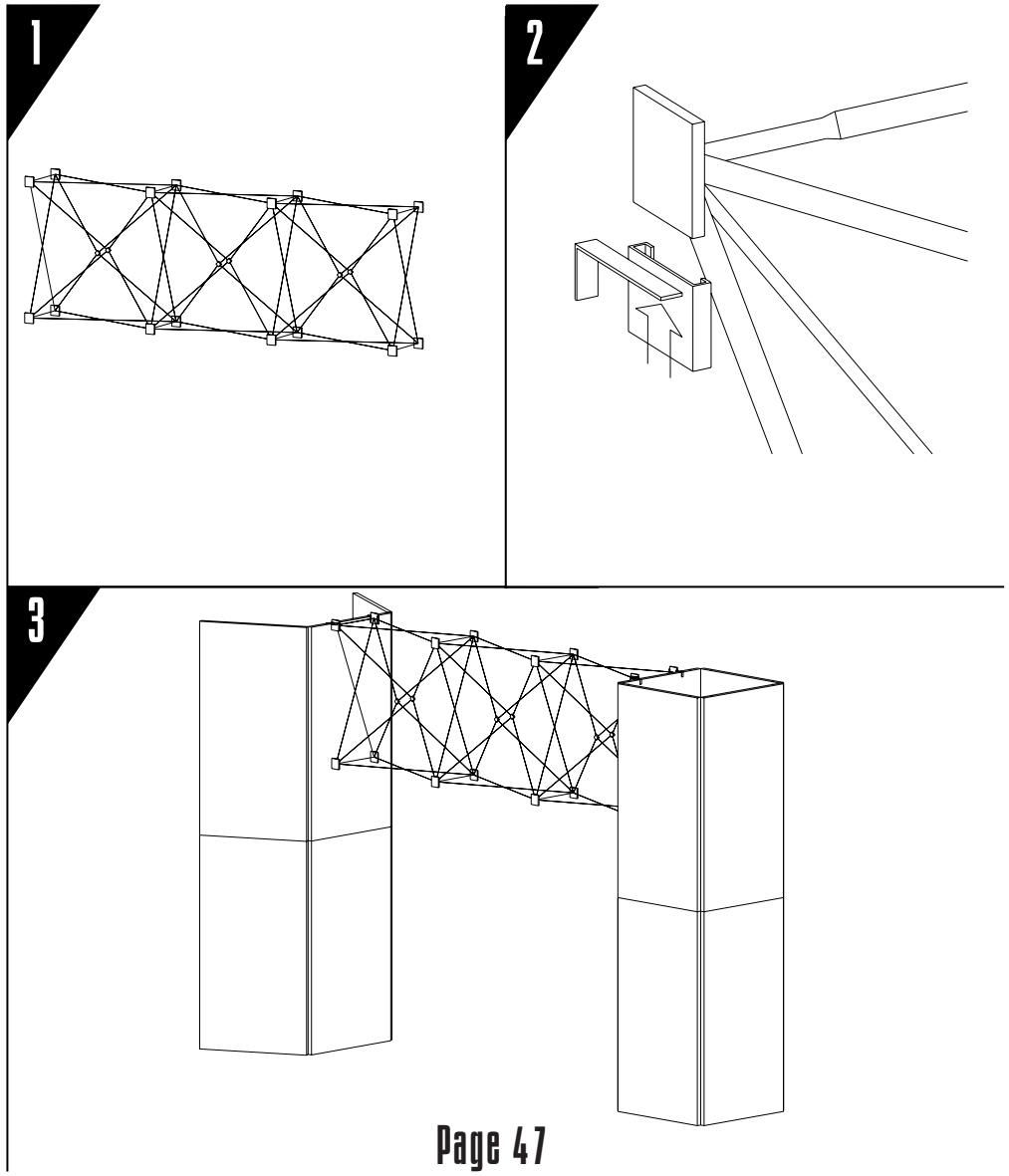

HANGING ABEX 350 TRUSS
VERTICAL ORIENTATION

1. Expand the truss frame and lock all the spacer bars, as explained in the "Quick Start" section of the Abex 300 series Owner's Manual.

2. Slide hanging brackets onto the hubs at the 4 upper corners of the truss.

3. Hang the truss between the backwall and a display case or tower. (square tower shown)

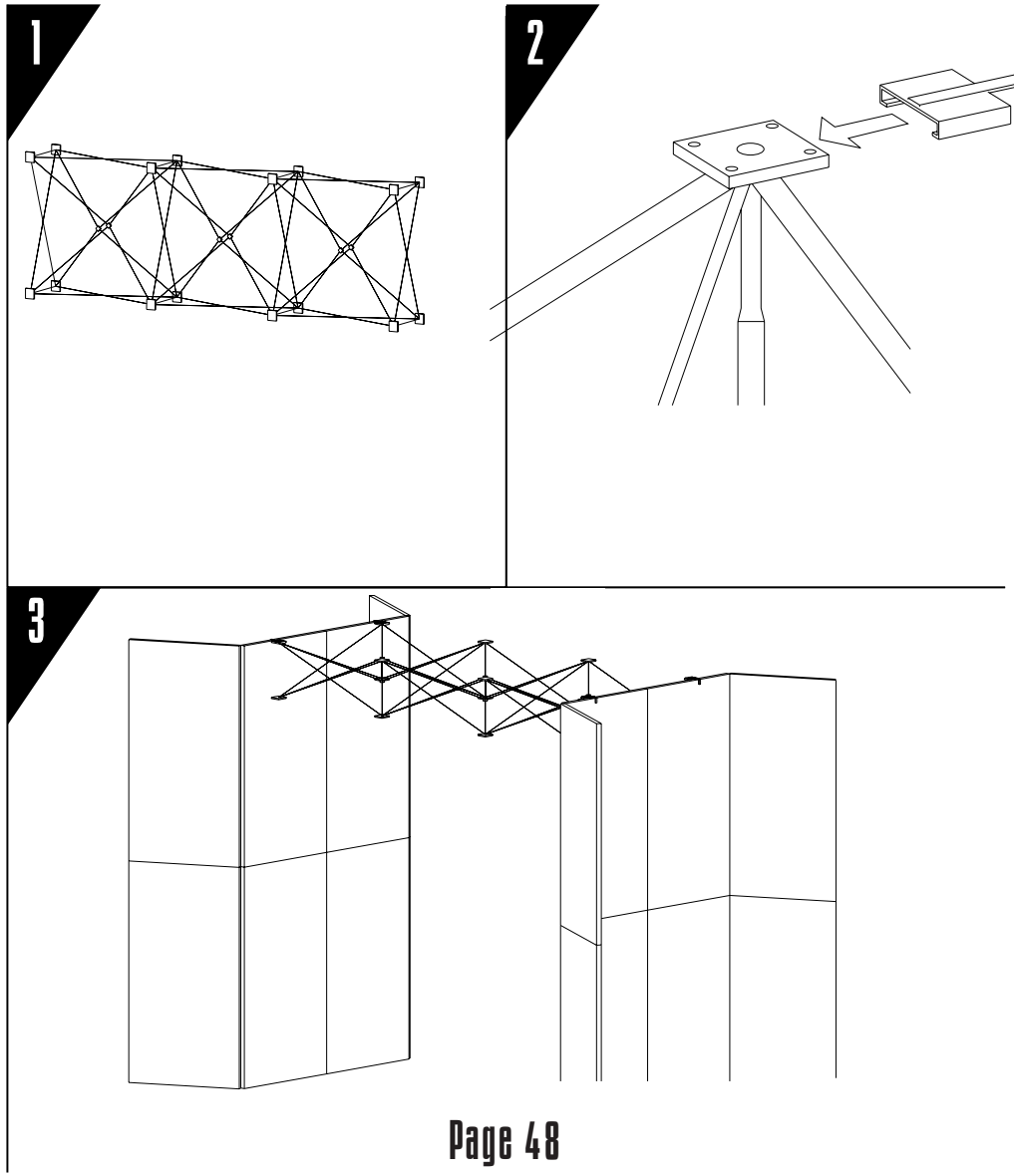

HANGING ABEX 350 TRUSS HORIZONTAL ORIENTATION

1. Expand the truss frame and lock all the spacer bars, as explained in the "Quick Start" section of the Abex 300 series Owner's Manual.

2. Rotate frame so broad side faces floor. Slide hanging brackets onto the hubs at the 4 upper corners.

3. Hang the truss between backwall sections.

PACKING TIPS

Use these tips as a guide to simplify your tear-down and repacking.

- Pack countertops in boxes with foam inserts before placing in cases.
- Place clips and lights in appropriate boxes.
- Remove keys from locks before folding up panels.
- Remove plexiglas and snaptrack before folding up a backwall containing a double lightbox.
- Remove reflectors and lights from panel before collapsing.
- Make sure that any roseanne (threaded) inserts are facing the outside of the case.
- Make sure curved system panel struts are laying flat before folding.
- Panel pegs should be facing upward when packing in a tub.
- Do not place smaller counter top boxes on top of system panels as they may leave an indentation.
- Cases may be strapped together for easy transportation.

TRANSPORT CASE PACKING DIAGRAM

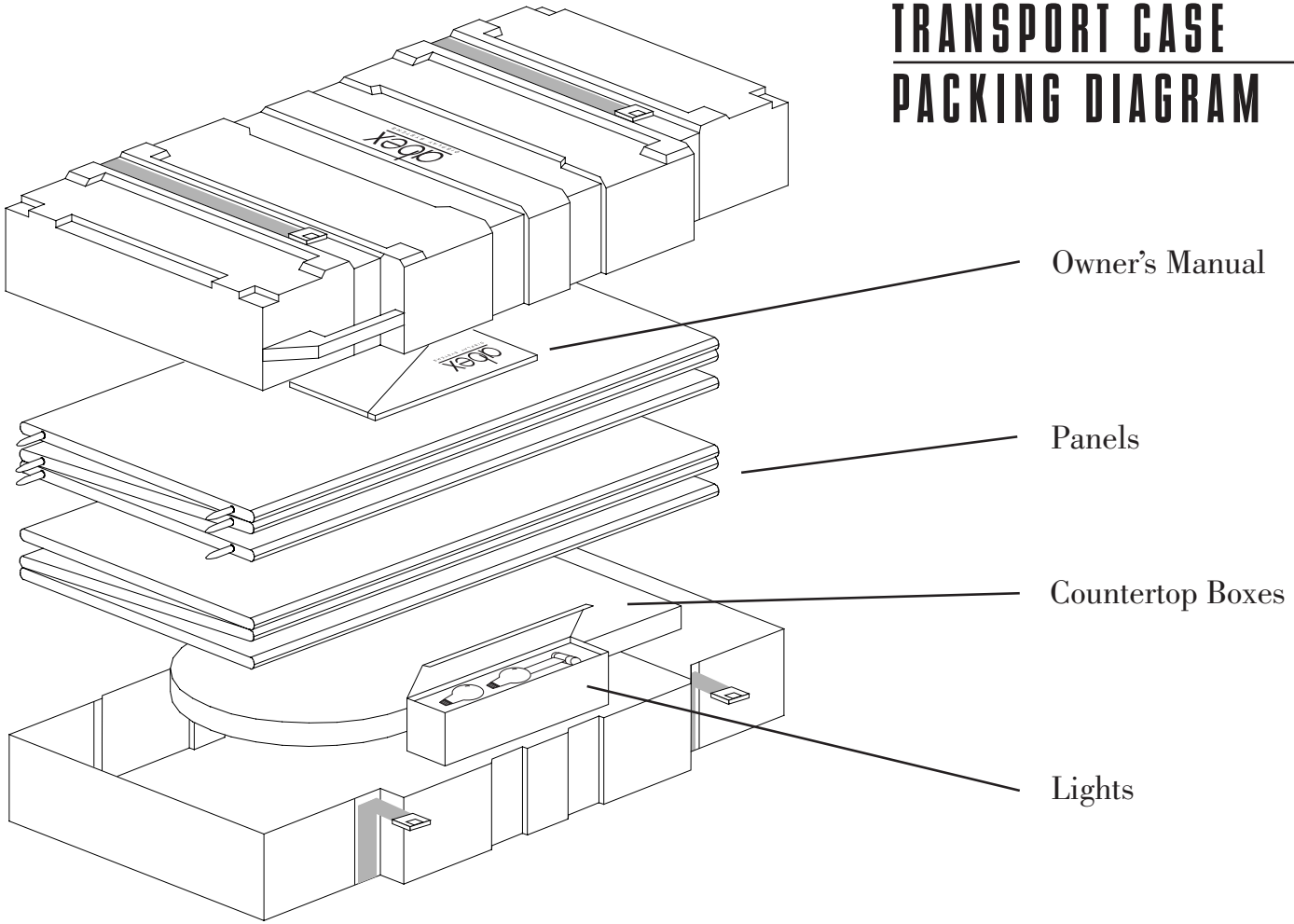

TRANSPORT TUB PACKING DIAGRAM

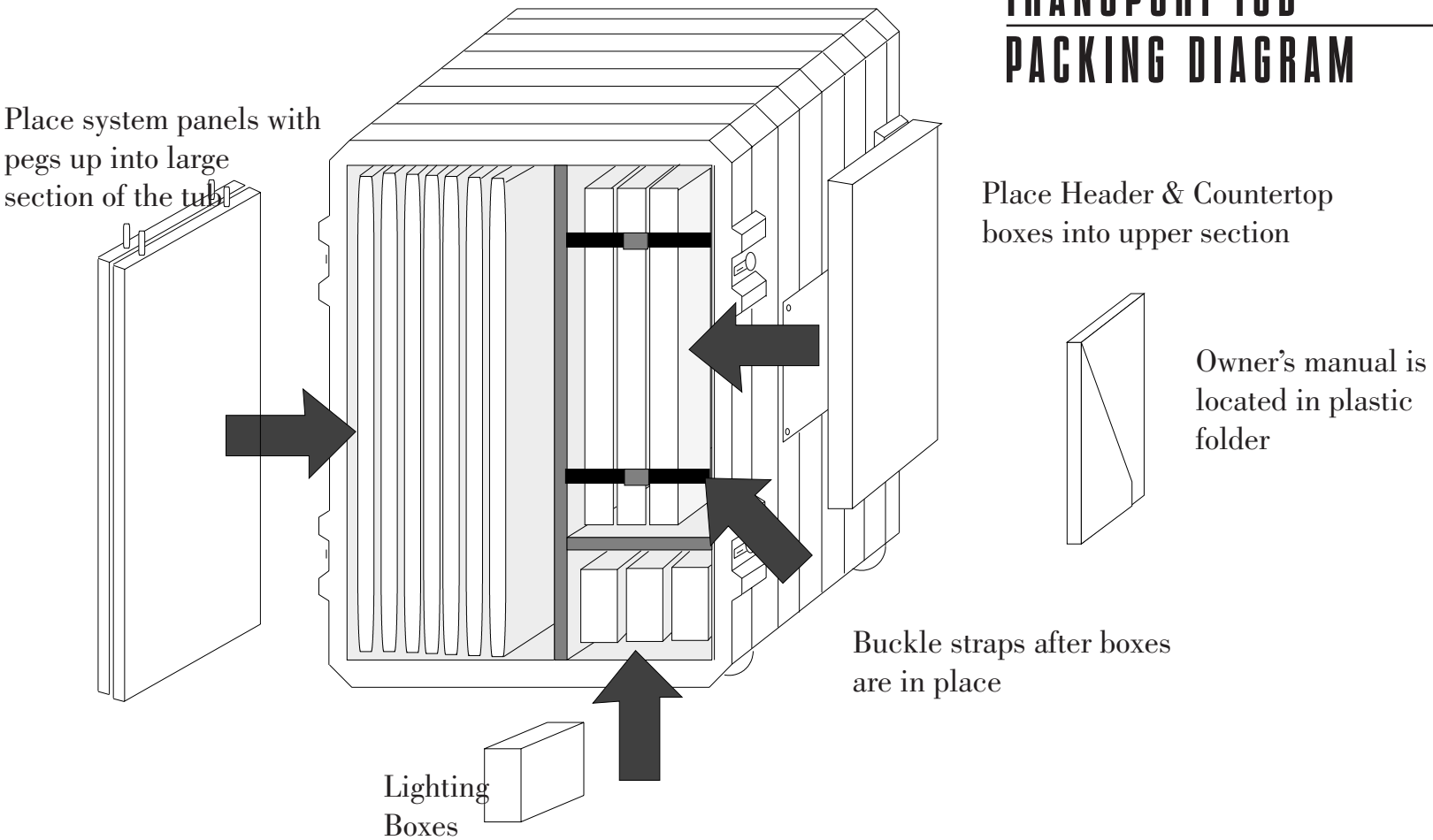

CARE & MAINTENANCE

Your Abex 600 MultiConnect display system is virtually maintenance-free. In order to insure that your display is always looking its best, we recommend these basic care procedures.

- Avoid placing system pegs on floor.
- Return display to room temperature before handling.
- Do not leave display in direct sunlight or trunk of your car.
- Do not subject display to extreme heat or cold.
- Store display upright at room temperature.
- Clean plexiglas with Bestine® or equivalent to remove dust or dirt.
- Use a soft brush to restore fabric nap.
- Sponge off stains with mild household detergent or mild carpet cleaner spot remover.