abex 500 QUICKCONNECT PANEL SYSTEM

QUICK START INSTRUCTIONS

SEE OTHER SIDE FOR PART TWO

1

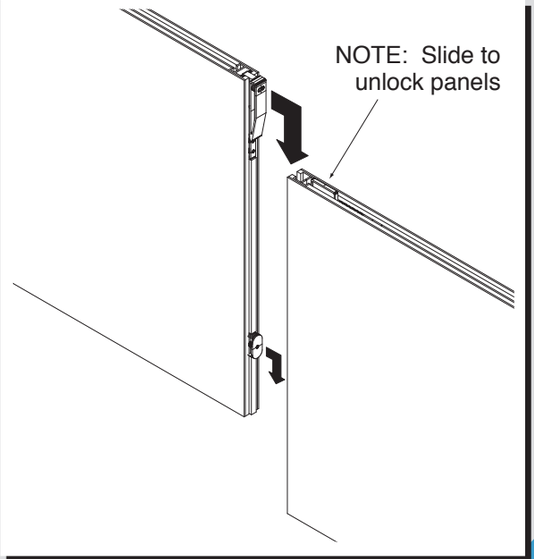

PANEL CONNECTION: Panels and angled connectors have tabs on their left side and a channel with notches on their right side. Panels are connected by interlocking the tabs of one panel with the channel of another. Raise panel slightly, so that the lower tab is aligned with the lower notch in the other panel. Bring panels together and slide down to engage locking pin.

2

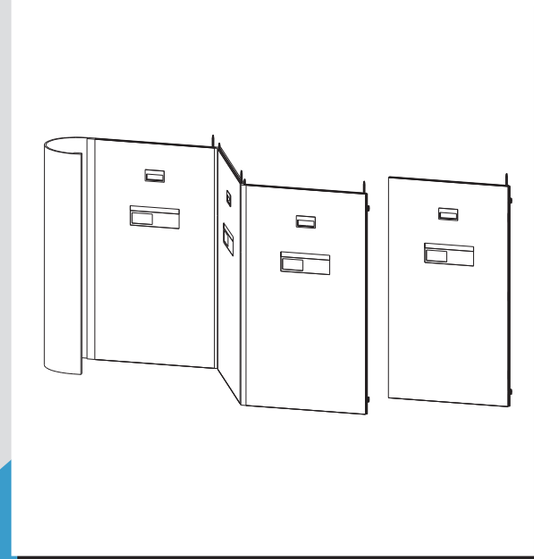

ORDER OF PANEL ASSEMBLY: Every panel and angled connector has a numbered sticker. Panel should be assembled in numerical order, starting with number 1 and ending with the last panel on the bottom level. For units with curved end panels, panel number 1 will be a curve.

3

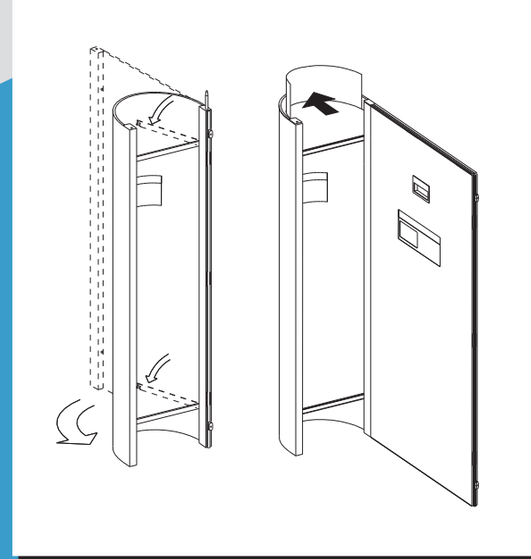

SETTING UP THE CURVED END PANELS: First, flex bottom curved end panel into curved shape and swing support bars down to hold position. They clip onto the bolts protruding from the wooden section of the panel. Install a "tongue" to block light at seam (black arrow). It attaches at the back of the top curved end panels with velcro. Attach Bottom Panel 2.

4

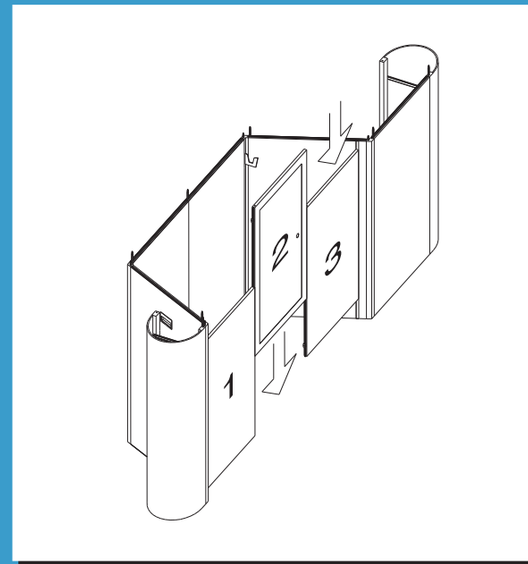

ALCOVE COUNTER BASE INSTALLATION: After 1st level of unit is complete, install the alcove counter base if applicable. Attach the left alcove base panel first. The panel slides down into a track. Next, attach the right alcove base panel, followed by the center alcove base panel (door panel).

5

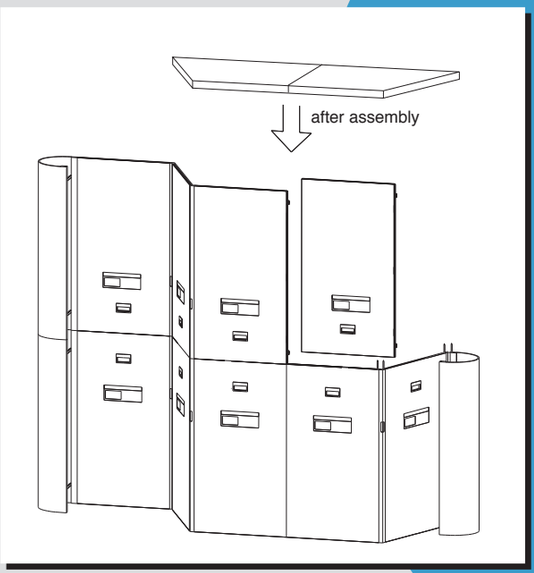

STACKING THE SECOND LEVEL: Using the procedure in step 3, assemble the top curved end panel (Top Panel 1) as shown. The lower level stacking pegs align with holes in the bottom of the top panel. Attach sequentially numbered top panels. If applicable, unfold alcove shelf and secure underside latch and UniStrut bar. Lower alcove top into position as shown.

6

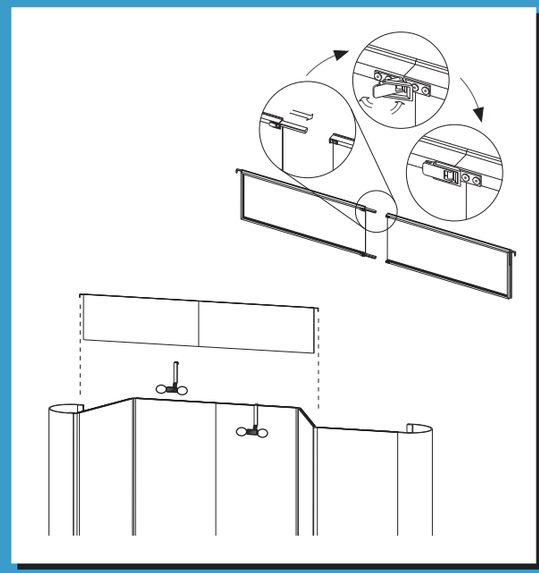

ALCOVE HEADER & LIGHT FIXTURE INSTALLATION: Slide header sections together and fasten latches to secure. Hook light fixtures over top of backwall as shown. Lower assembled header into position.

7

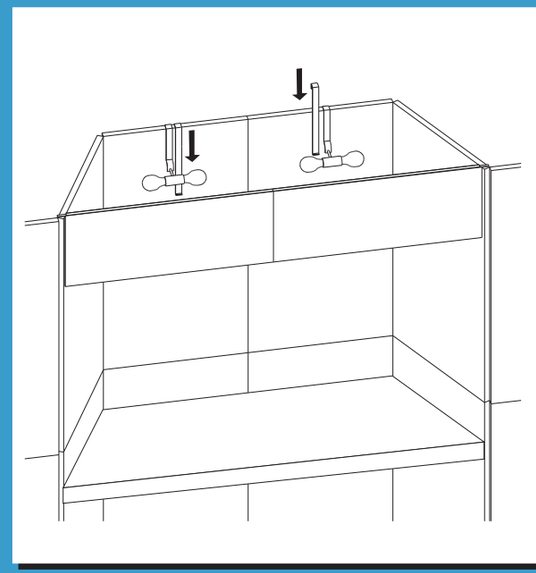

ALCOVE CEILING PANEL INSTALLATION: Hang ceiling panel brackets from top of backwall.

8

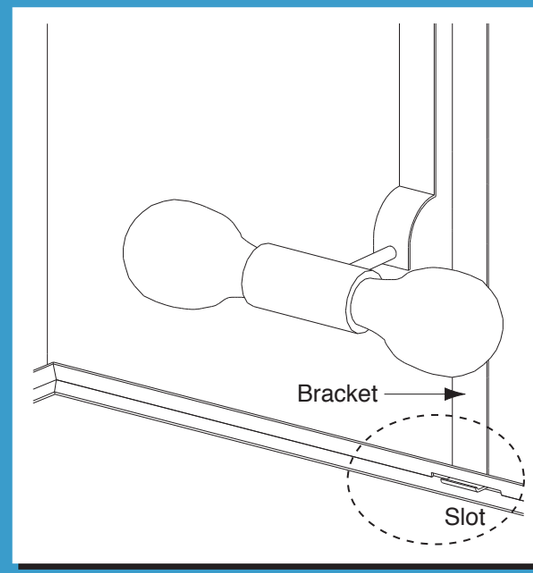

Hang the left half of the ceiling panel from the left ceiling panel bracket. The slot in ceiling panel's rear extrusion accepts the bracket. Hang the right half of the ceiling panel from the right bracket.

9

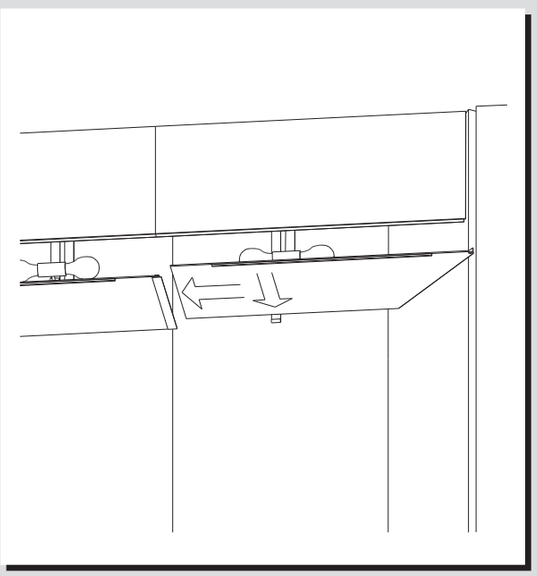

Insert edge of right hand ceiling panel into the "H" molding which is glued to left hand ceiling panel.

10

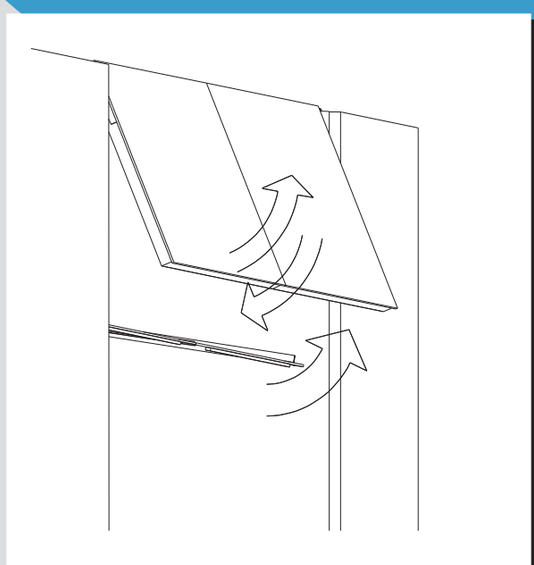

Swing header forward slightly, and raise ceiling panel. Lower ceiling panel so plastic strip on bottom of front edge fits inside the channel on the bottom of the header.

11

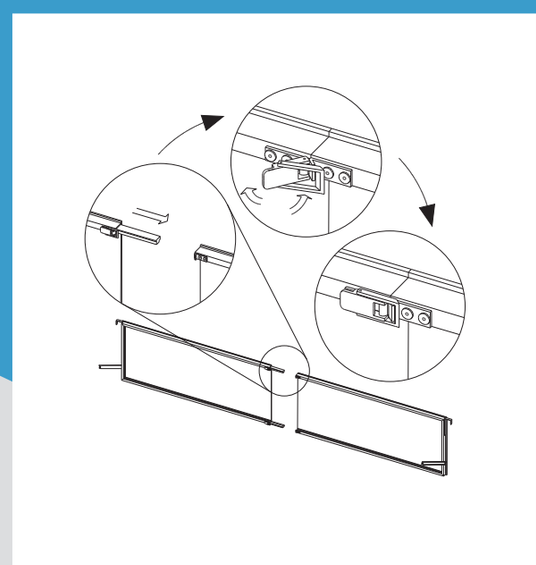

ANGLED BRIDGE HEADER & CEILING PANEL INSTALLATION: Slide header sections together and fasten the latches to secure.

12

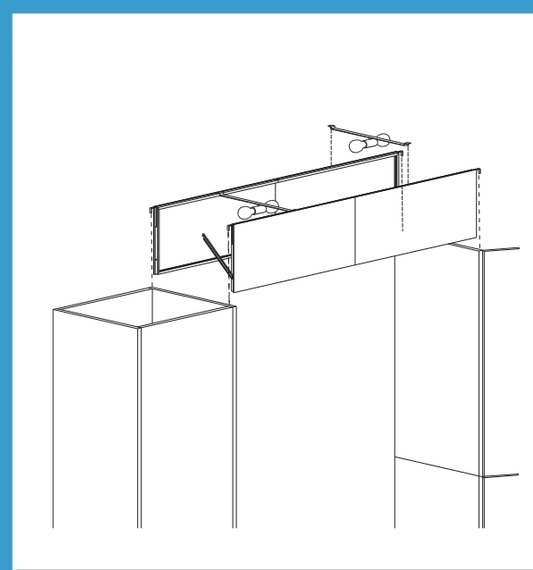

Hang header sides between walls. Attach light fixtures. Be sure tabs on fixtures engage with holes on top of header frames.

abex 500 QUICKCONNECT PANEL SYSTEM

QUICK START INSTRUCTIONS

SEE OTHER SIDE FOR PART ONE

13

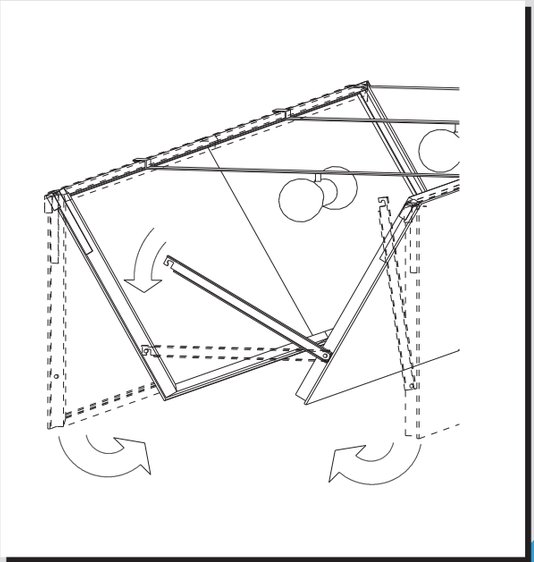

ANGLED BRIDGE HEADER & DIFFUSER INSTALLATION (continued from other side): Rotate header sides to angled position and lock support bars in place.

14

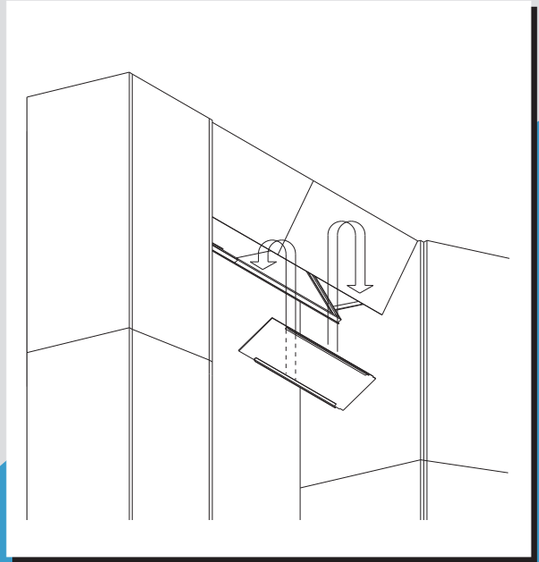

Install ceiling panels. The aluminum angles face down and fit in the channels on the bottom of the header sides. Tilt ceiling panels so they will fit through the opening, raise, and let drop into place.

15

RADIUS PENINSULA COUNTER INSTALLATION: Unfold panels as shown.

16

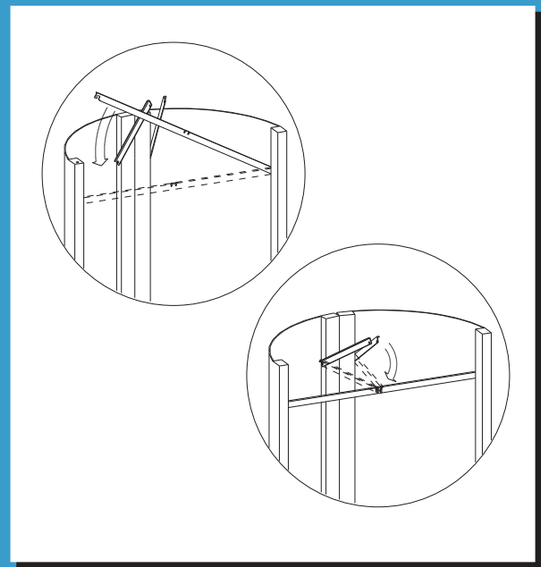

Flex curved panels and latch long support rods. Short support rods fold down to fit in notches in long rods.

17

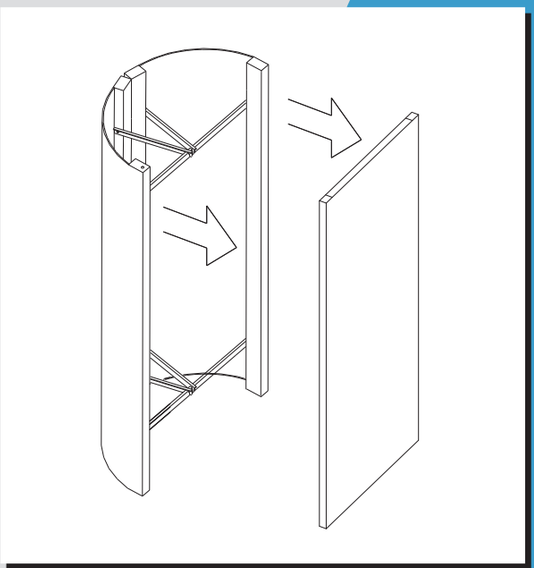

Attach curve panels to flat panel by sliding tabs into tracks.

18

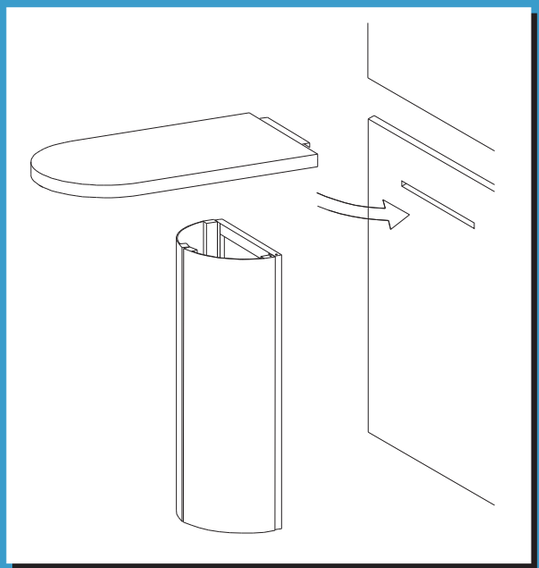

Position base as shown. Insert countertop bracket into slot in panel and rest countertop on base.

19

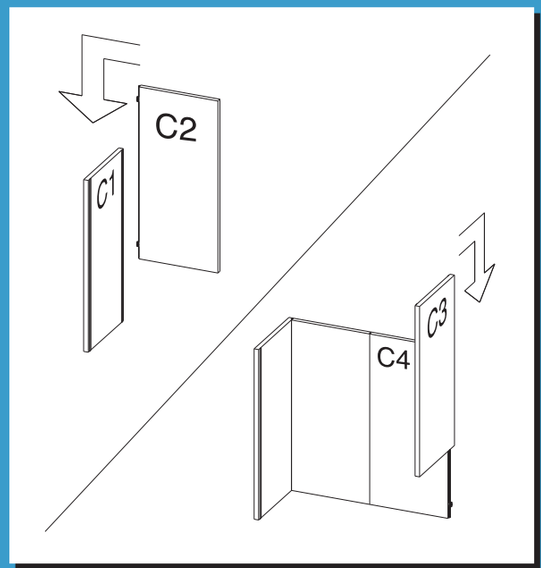

RECTANGULAR COUNTER INSTALLATION: Starting with counter base panel C1, attach counter base panel C2 using procedure descibed in Step 1. Attach counter base panels C3 and C4.

20

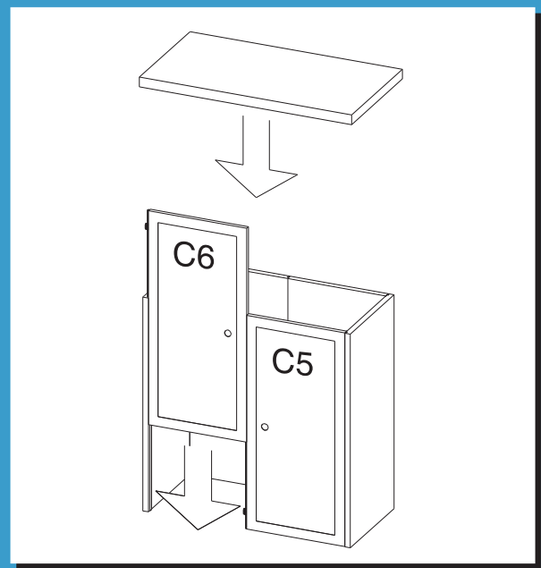

Attach counter base panels C5 and C6 (the panels with hinged doors). Position countertop as shown.

21

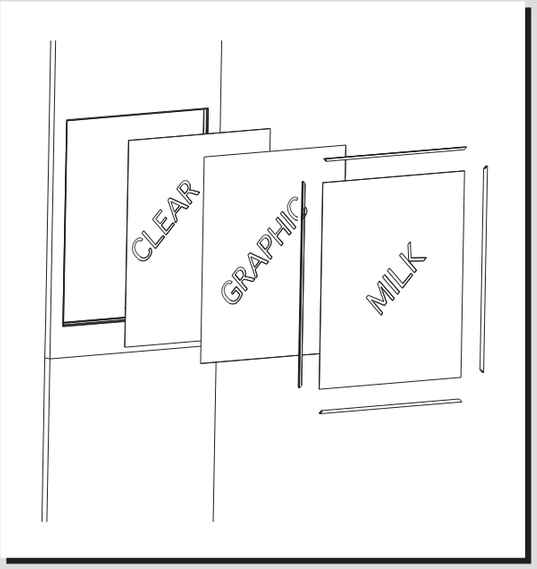

LIGHTBOX INSTALLATION: Remove trim strips around the rear edges of the opening. Insert the graphic into the opening, sandwiched by a milk panel in the rear, and a transparent panel in the front. Replace trim strips.

22

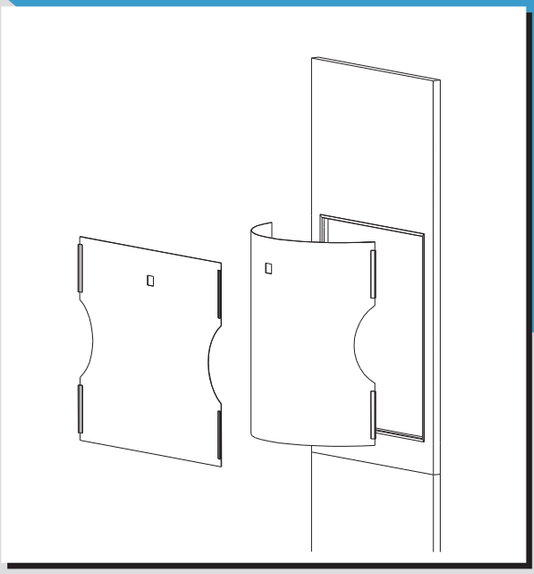

Flex reflector panel and insert into the back of the opening.

23

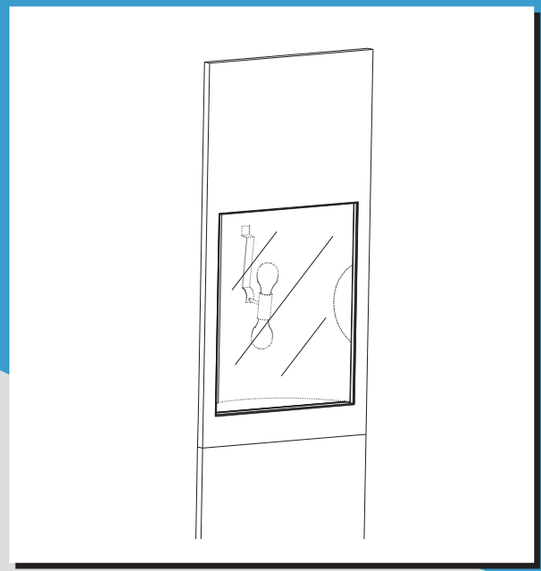

Hang light fixture from hole in reflector panel.

24

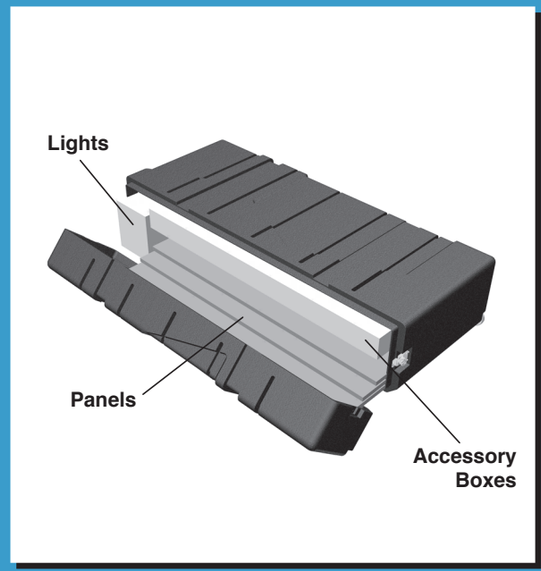

Refer to diagram above for general repacking of your display.