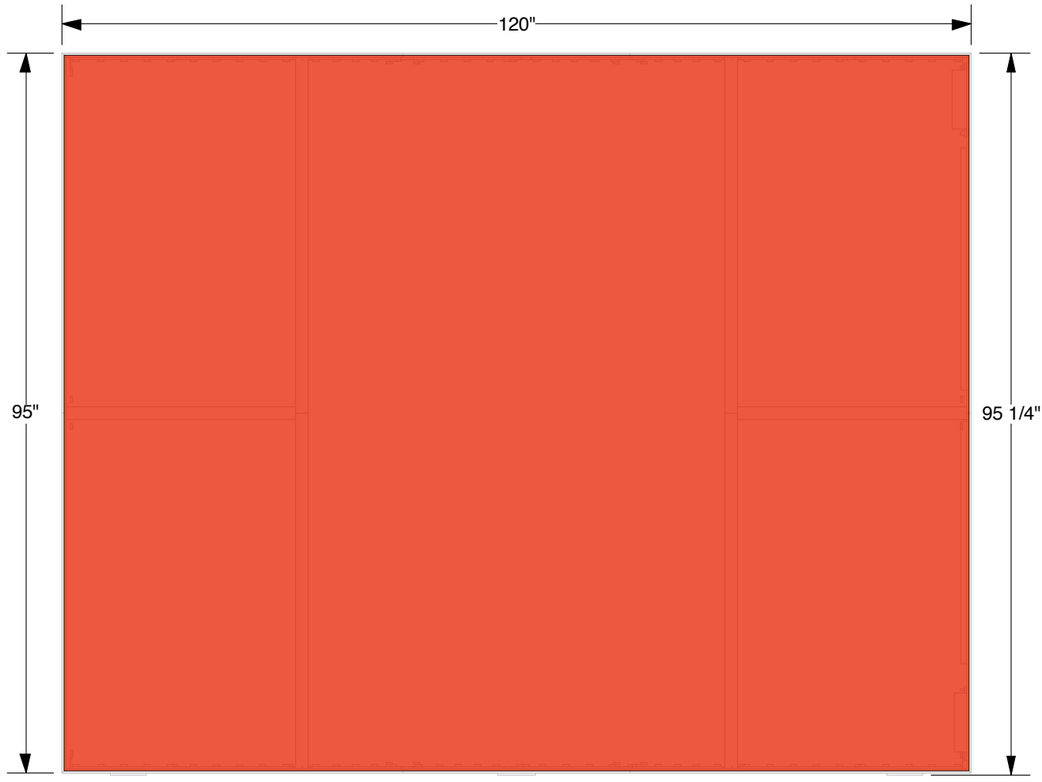

FRONT VIEW

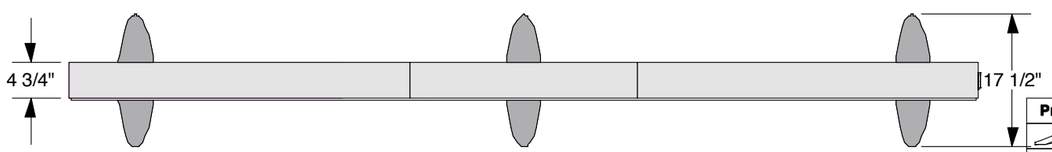

TOP VIEW

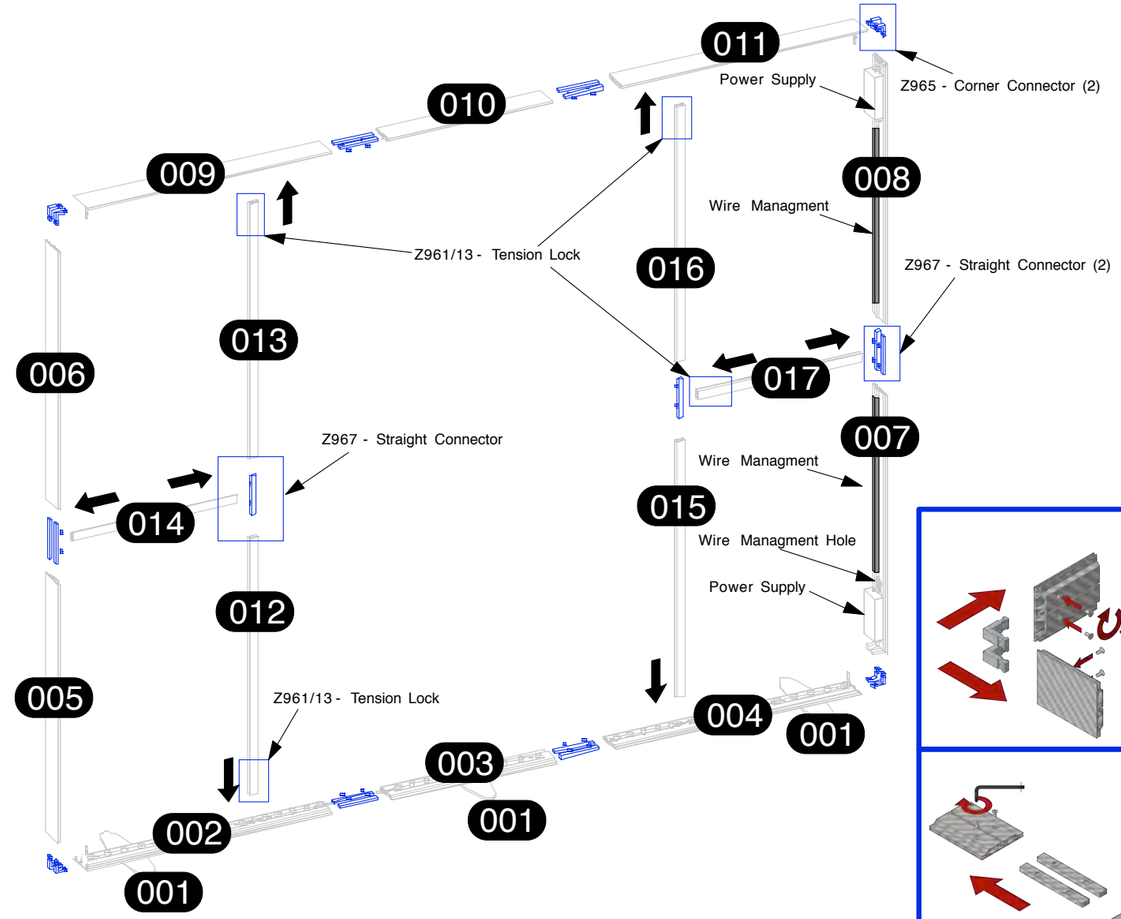

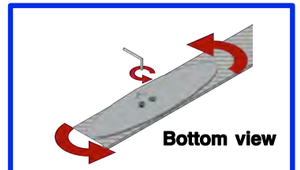

Loosen the screws on base plate but do not remove them. Than swivel base plates.

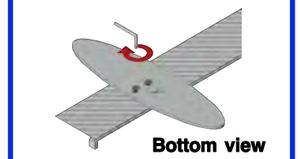

Tighten both screw firmly.

Z965 - Corner Connector

Connect frame extrusions together, as shown, using Torx tool (included). Do not overtighten.

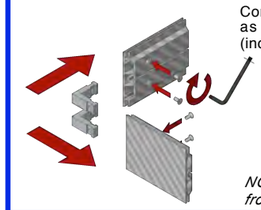

NOTE: Remove corner connectors from exrtrusions before packing

Z967 - Straight Connector

Connect frame spliced extrusions together, as shown, using Torx tool (included). Do not overtighten.

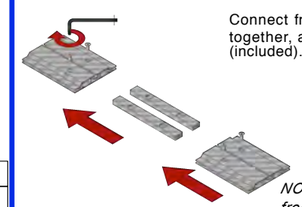

NOTE: Remove connectors from beams before packing

Z967 - Straight Connector

Connect frame spliced extrusions together, as shown, using Torx tool (included). Do not overtighten.

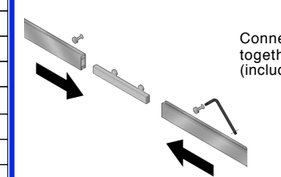

NOTE: Remove connectors from beams before packing

Z961/13 - Tension Lock

Place tension lock into groove. Insert Torx 30 wrench and turn 1/2 turn

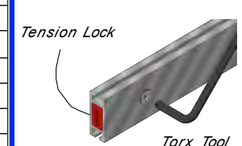

INSTRUCTIONS

1. Slide straight connector (Z967) into inner channel of extrusion.Turn screw enough to hold connector in place.
2. Take another extrusion and slide onto straight connector. Tigthen both screws to connect extrusions together.
3. Repeat above steps to connect all spliced extrusions together.
4. Slide corner connector (Z966) into both sides of horizontal extrusions.Turn each screw enough to hold connector in place.
5. Slide vertical extrusions onto corner connectors of top horizontal extrusion. Turn each screw enough to hold connector in place.
6. Finish frame assembly by sliding corner connectors of bottom horizontal extrusion into inner channel of vertical extrusions and tighten the screws to secure frame extrusions together.

Profile	Label	#	Description
	001	3	1/4" ALUMINIUM OVAL BASE PLATE 17.5" (444.5MM) x 4.72" (120MM)
	002	1	M1901 45" (1143MM) EXTRUSION W/ (1) 45° CUT, (2) HOLES FOR BASE PLATE & LIGHTS
	003	1	M1901 30" (762MM) EXTRUSION W/ (2) HOLES FOR BASE PLATE & LIGHTS
	004	1	M1901 45" (1143MM) EXTRUSION W/ (1) 45° CUTS, (2) HOLES FOR BASE PLATE & LIGHTS
	005	1	M1901 47.5" (1206.5MM) EXTRUSION W/ (1) 45° CUT
	006	1	M1901 47.5" (1206.5MM) EXTRUSION W/ (1) 45° CUT
	007	1	M1901 47.5" (1206.5MM) EXTRUSION W/ (1) 45° CUT, PLASTIC EXTR. & POWER SUPPLY
	008	1	M1901 47.5" (1206.5MM) EXTRUSION W/ (1) 45° CUT, PLASTIC EXTR. & POWER SUPPLY
	009	1	M1901 45" (1143MM) EXTRUSION W/ (1) 45° CUT & LIGHTS
	010	1	M1901 30" (762MM) EXTRUSION W/ LIGHTS
	011	1	M1901 45" (1143MM) EXTRUSION W/ (1) 45° CUT & LIGHTS
	012	1	Z4400 46.87" (1190.5MM) EXTRUSION W/ (1) TENSION LOCK
	013	1	Z4400 46.87" (1190.5MM) EXTRUSION W/ (1) TENSION LOCK
	014	1	Z4400 30.22" (767.5MM) EXTRUSION W/ (2) TENSION LOCKS
	015	1	Z4400 46.87" (1190.5MM) EXTRUSION W/ (1) TENSION LOCK
	016	1	Z4400 46.87" (1190.5MM) EXTRUSION W/ (1) TENSION LOCK
	017	1	Z4400 30.22" (767.5MM) EXTRUSION W/ (2) TENSION LOCKS
		8	Z966 90° CORNER INTERNAL CONNECTOR
		14	Z967 STRAIGHT INTERNAL CONNECTOR
		4	5/16-18 FLAT HEAD SCREW 0.75" LONG FOR BASE PLATES
		2	120"W (3048MM) x 95"H (2413MM) SINGLE SIDED DYESUB GRAPHIC W/ SEG WELT ALL 4 SIDES

Abex Exhibit Systems • 355 Parkside Drive, San Fernando, CA 91340 • (800) 537-0231

abex EXHIBIT SYSTEMS

GRAPHIC

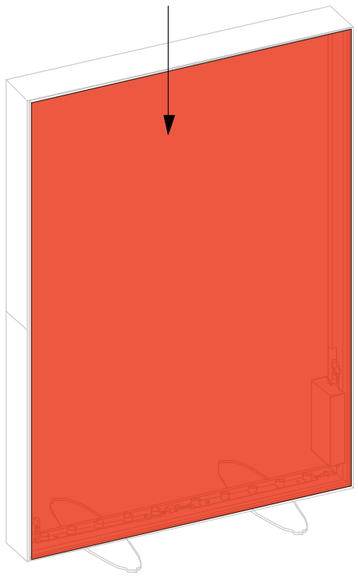

3D VIEW

GRAPHIC

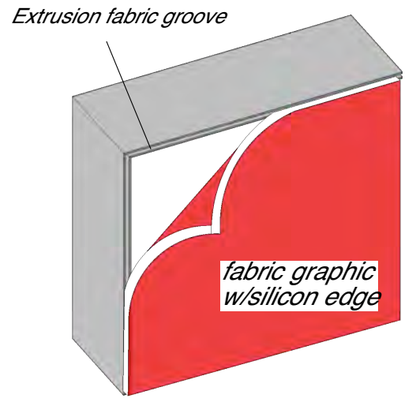

Insert the silicon edge of the fabric into the groove of the extrusions.

Start on the corners, than centers and work your way to corners from center on both directions.

To pull fabric graphic out of extrusion groove use pull tab on corner.

PACKING DIAGRAM

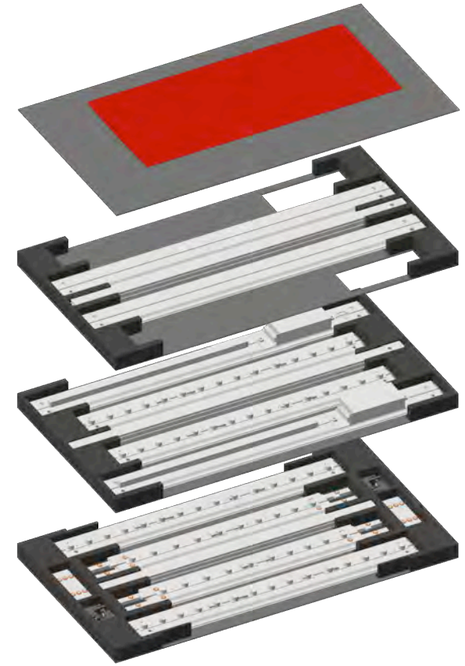

LIGHTS DETAILS

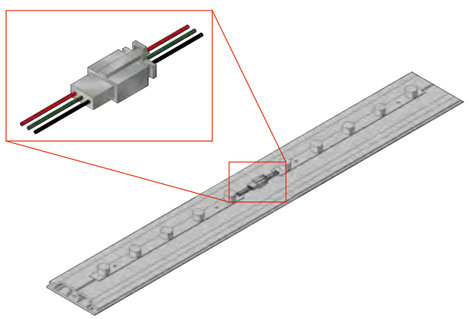

Strip-To-Power Cord

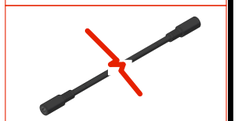

EXtension Cord 12ft

Lights come attached to extrusions. Ensure all lighting strips are connected. Once frame is assembled, connect strip-to-power cords to the end of top and bottom lights chain.
- For bottom lights connect strip-to-power cord to power supply directly.
- For top lights connect extension cord to strip-to-power cord and run with wire managment extrusion then connect to power supply.

Run AC power cord out through grommet hole on vertical upright and connect to power outlet.
To remove or re-attach light strips use provided thumbscrews with plate.

WALL ASSEMBLY (OPTIONAL)

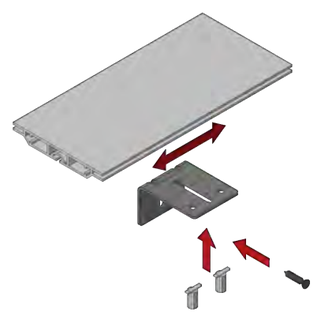

Attach wall bracket to top extrusion groove with provided hammerhead screws. Locate position of wall bracket on extrusion (preferably by wood stud) by sliding the bracket on the extrusion and tighten it. Secure the frame to the wall with provided wood screw.

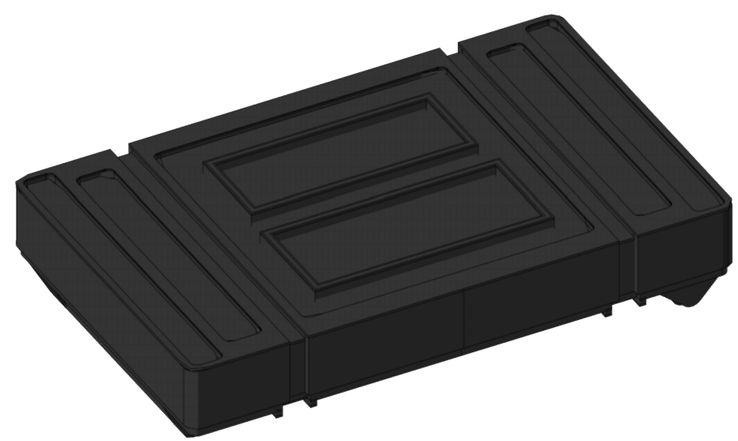

LUMIWALL TRAPEZOID

ASSEMBLY INSTRUCTIONS

CLIENT:
ORDER:
INSTR: **LWT-38-INSTR**

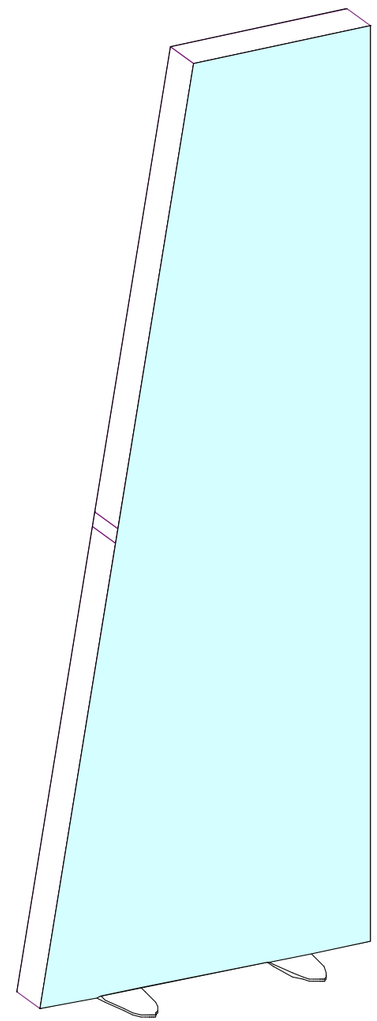

Abex Exhibit Systems • 355 Parkside Drive, San Fernando, CA 91340 • (800) 537-0231

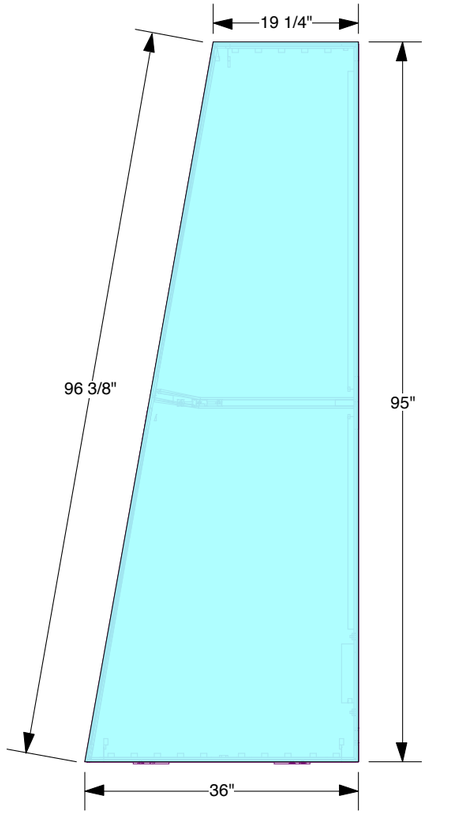

FRONT VIEW

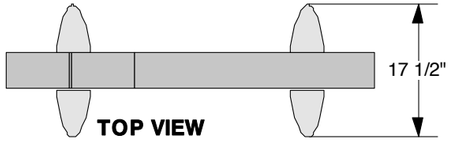

TOP VIEW

Profile	Label	#	Description
	001	2	1/4" ALUMINIUM OVAL BASE PLATE 17-1/2" x 4-3/4"
	002	1	M1901 36" W/ (1) 50° CUT & (1) 45° CUT , (4) HOLES FOR BASE PLATE & LIGHTS
	003	1	M1901 47-1/2" EXTRUSION W/ (1) 50° CUT
	004	1	M1901 1-15/32" EXTRUSION W/ (2) STRAIGHT CONNECTORS
	005	1	M1901 47-1/2" EXTRUSION W/ (1) 40° CUT
	006	1	M1901 47-1/2" EXTRUSION W/ (1) 45° CUT, POWER SUPPLY
	007	1	M1901 47-1/2" EXTRUSION W/ (1) 45° CUT
	008	1	M1901 19-1/4" EXTRUSION W/ (1) 40° CUT, (1) 45° CUT & LIGHTS
	009	1	Z4400 6" EXTRUSION W/ (1) 5° CUT & (1) TENSION LOCK
	010	1	Z4400 20-13/32" EXTRUSION W/ (1) 5° CUT & (1) TENSION LOCK
		1	E460 42" PLASTIC WIRE MANAGEMENT
		1	E460 28" PLASTIC WIRE MANAGEMENT
		4	Z966 90° CORNER INTERNAL CONNECTOR
		4	Z964 ADJUSTABLE CORNER INTERNAL CONNECTOR
		1	Z966/V ADJUSTABLE INTERNAL CONNECTOR
		2	Z967 STRAIGHT INTERNAL CONNECTOR
		4	5/16-18 FLAT HEAD SCREW 0.75" LONG FOR BASE PLATES
		2	36"W x 95"H TRAPEZOID DYESUB FABRIC W/ SEG WELT ON ALL 4 SIDES

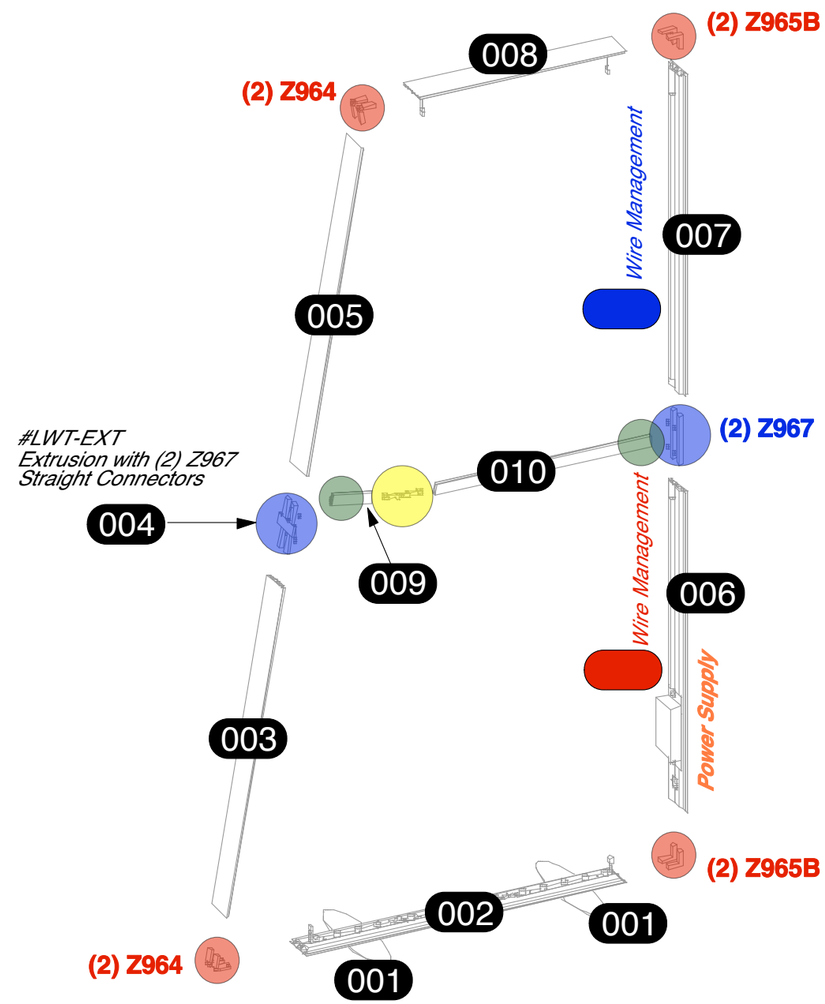

1. Slide straight connector (Z967) into inner channel of extrusion.Turn screw enough to hold connector in place.
2. Take another extrusion and slide onto straight connector. Tigthen both screws to connect extrusions together.
3. Repeat above steps to connect all spliced extrusions together.
4. Slide corner connector (Z964 & Z965) into both sides of horizontal extrusions.Turn each screw enough to hold connector in place.
6. Slide vertical extrusions onto corner connectors of top horizontal extrusion. Turn each screw enough to hold connector in place.
7. Finish frame assembly by sliding corner connectors of bottom horizontal extrusion into inner channel of vertical extrusions and tighten the screws to secure frame extrusions together.

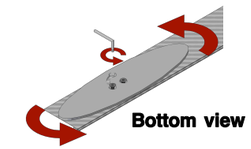

Loosen the screws on base plate but do not remove them. Than swivel base plates.

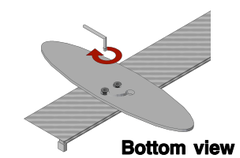

Tighten both screw firmly.

Z965B - Corner Connector
Z964 - Adjustable Corner Connector

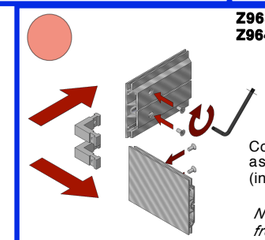

Connect frame extrusions together, as shown, using Torx tool (included). Do not overtighten.

NOTE: Remove corner connectors from exrtrusions before packing

Z967 - Straight Connector

Connect frame spliced extrusions together, as shown, using Torx tool (included). Do not overtighten.

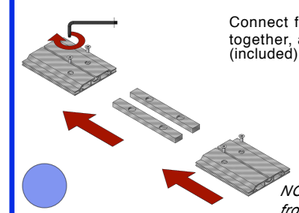

NOTE: Remove connectors from beams before packing

Z961/13 - Tension Lock

Place tension lock into groove. Insert Torx 30 wrench and turn 1/2 turn

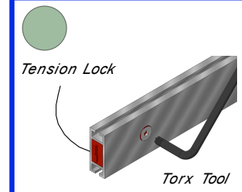

Z966/V - Adjustable Connector

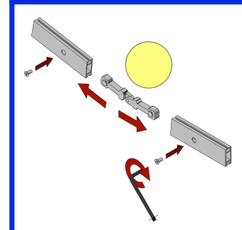

Insert connector into short piece first and tighten screw using Torx tool (included). Do not overtighten. Repeat procedure for long piece.

NOTE: Remove corner connectors from exrtrusions before packing

abex EXHIBIT SYSTEMS

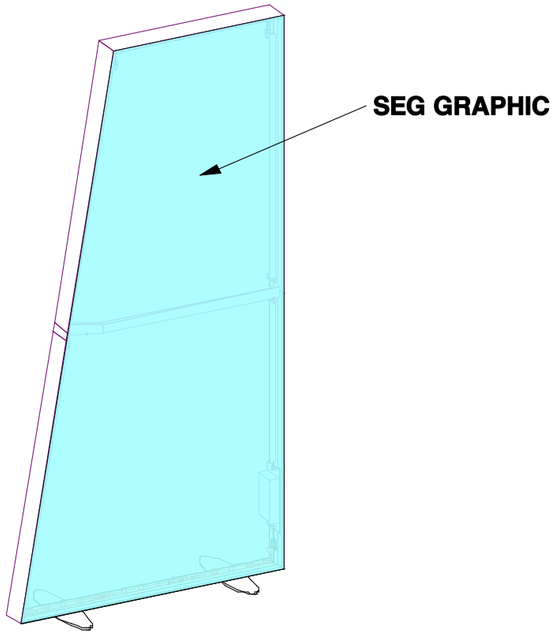

3D VIEW

SEG GRAPHIC

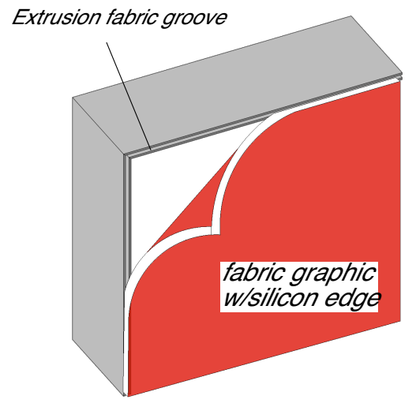

Insert the silicon edge of the fabric into the groove of the extrusions.

Start on the corners, than centers and work your way to corners from center on both directions.

To pull fabric graphic out of extrusion groove use pull tab on corner.

LIGHTS DETAILS

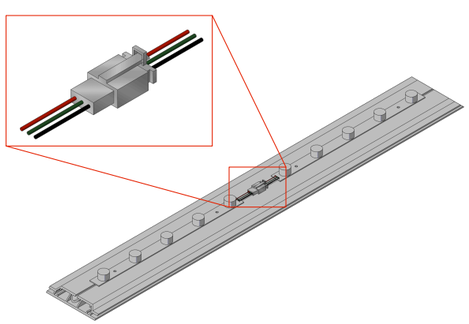

Lights ship attached to extrusions. Ensure all lighting strips are connected. Once frame is assembled, connect strip-to-power cords to the end of top and bottom lights chain.
- For bottom lights chain use short strip-to-power cord.
- For top lights chain use long strip-to-power cord and run thru wire managment plastic extrusions.

Run AC power cord out through grommet hole on vertical upright and connect to power outlet.
To remove or re-attach light strips use provided thumbscrews with plate.

WALL ASSEMBLY (OPTIONAL)

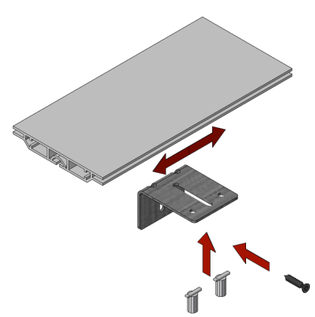

Attach wall bracket to top extrusion groove with provided hammerhead screws. Locate position of wall bracket on extrusion (preferably by wood stud) by sliding the bracket on the extrusion and tighten it. Secure the frame to the wall with provided wood screw.

PACKING DIAGRAM

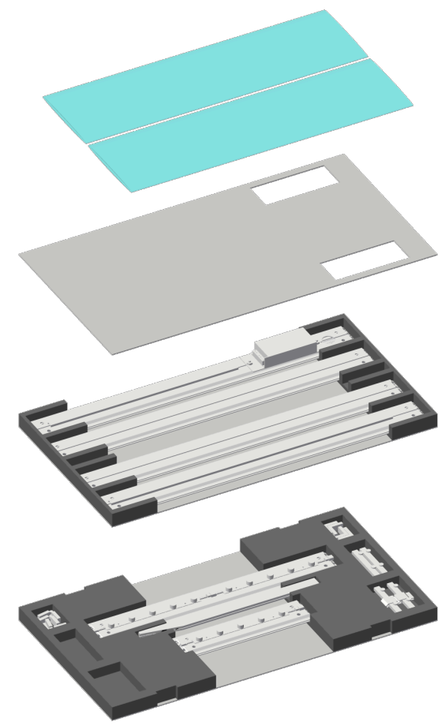
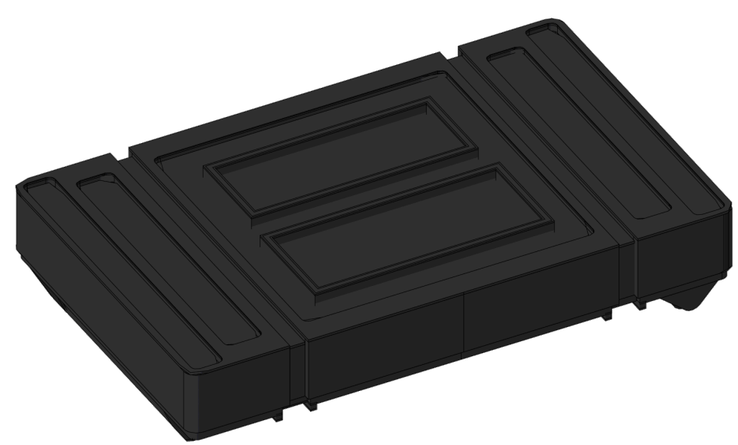
NOTE:
DO NOT DISCARD ANY PACKING MATERIAL.
LEVELS OF PARTS MAY BE SEPARATED BY WHITE SHEETS OF PLASTIC, COROPLAST OR CARDBOARD.